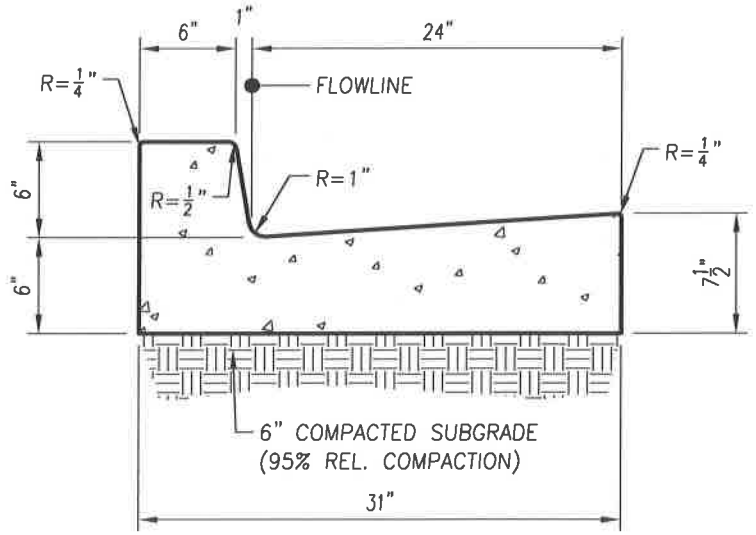

CURB AND GUTTER

CLASS 2 CONCRETE

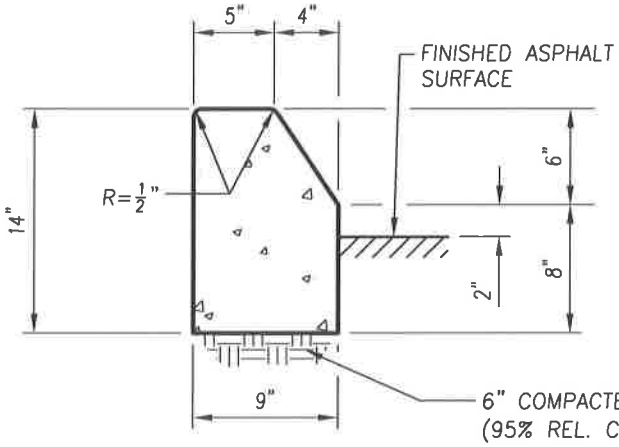

MEDIAN CURB

CLASS 2 CONCRETE

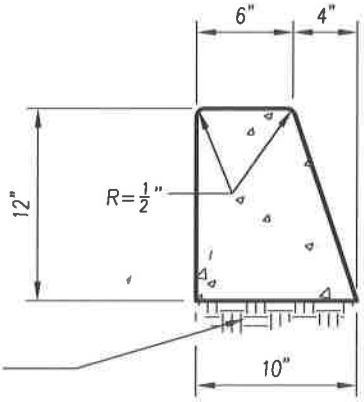

LANDSCAPE CURB

CLASS 2 CONCRETE

NOTES:

1. ALL CONCRETE SHALL BE AS NOTED.
2. WEAKENED PLANE JOINTS OR COLD JOINTS SHALL BE 1" DEEP AND PLACED AT 10' INTERVALS.
3. JOINTS SHALL BE PLACED AT THE BEGINNING AND ENDING OF ALL CURVES.

REVISIONS	DATE		CITY OF TULARE PUBLIC IMPROVEMENT STANDARD	
			CONCRETE CURB & GUTTER AND BARRIER CURBS	DRAWING NO.: 4010
			Approved By: Michael W. Miller Date: 11/15/16 City Engineer	1 OF 1

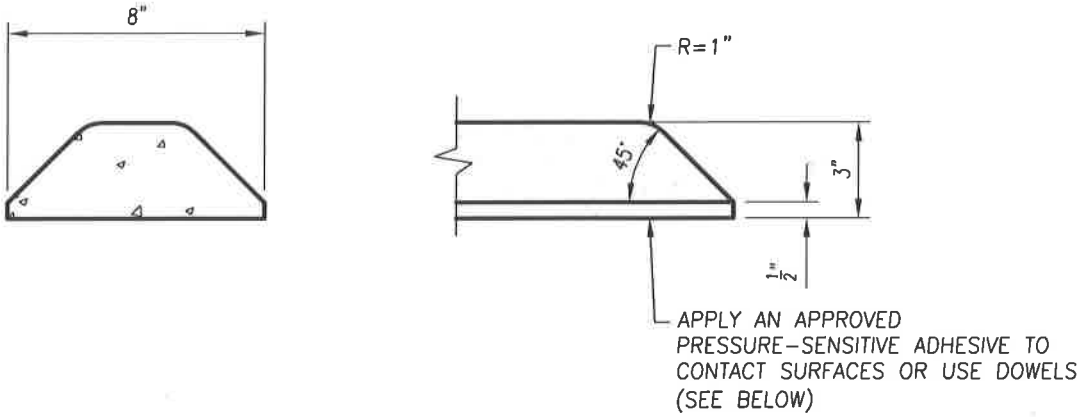

RAISED TRAFFIC BARS

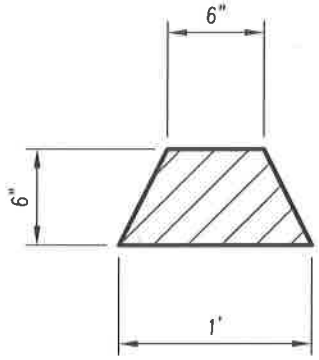

A.C. DIKE

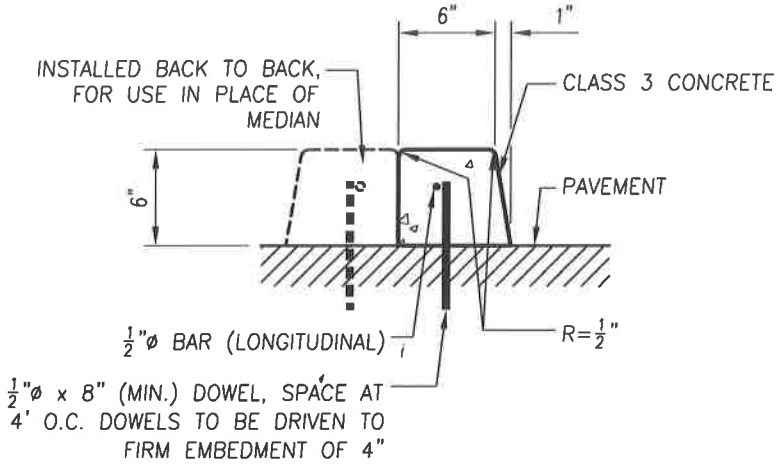

DOWELED CURB

NOTES:

1. HOT-MIX ASPHALT CONCRETE SHALL BE TYPE 'B' IN ACCORDANCE WITH THE CITY OF TULARE STANDARD SPECIFICATIONS.
2. USE OF DOWELED CURB REQUIRES PERMISSION FROM THE CITY ENGINEER.

REVISIONS	DATE		CITY OF TULARE PUBLIC IMPROVEMENT STANDARD	
			TRAFFIC BARS, A.C. DIKE AND DOWELED CURB	DRAWING NO.: 4015
			Approved By: Michael W. Miller Date: 11/15/16 City Engineer	1 OF 1

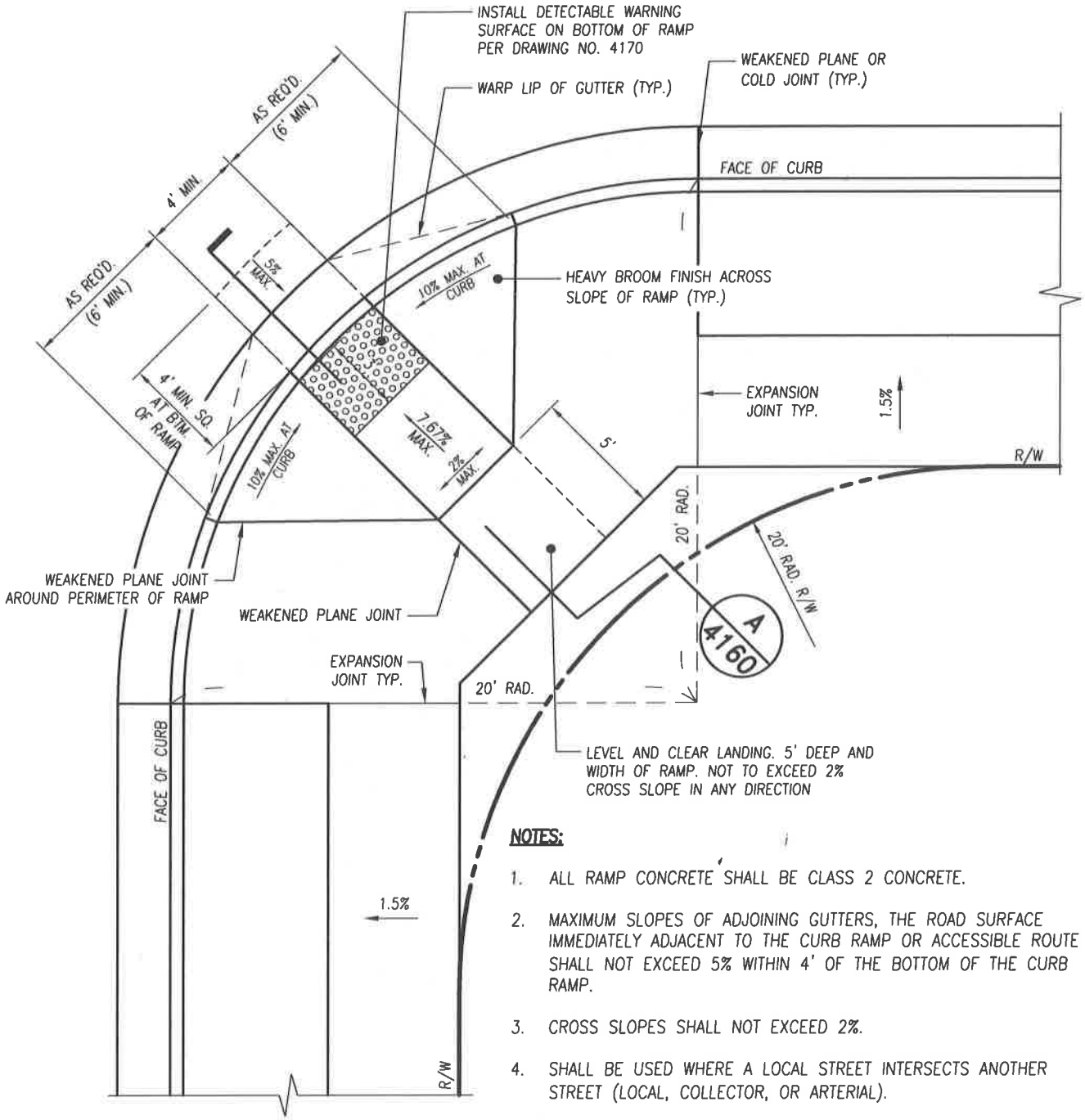

NOTES:

1. ALL RAMP CONCRETE SHALL BE CLASS 2 CONCRETE.
2. MAXIMUM SLOPES OF ADJOINING GUTTERS, THE ROAD SURFACE IMMEDIATELY ADJACENT TO THE CURB RAMP OR ACCESSIBLE ROUTE SHALL NOT EXCEED 5% WITHIN 4' OF THE BOTTOM OF THE CURB RAMP.
3. CROSS SLOPES SHALL NOT EXCEED 2%.
4. SHALL BE USED WHERE A LOCAL STREET INTERSECTS ANOTHER STREET (LOCAL, COLLECTOR, OR ARTERIAL).
5. THE EDGE OF THE DETECTABLE WARNING SURFACE NEAREST THE STREET SHALL BE BETWEEN 6" AND 8" FROM THE GUTTER FLOWLINE.
6. COMPACT UPPER 6" OF SUBGRADE UNDER ALL CONCRETE FROM BCR TO ECR TO 95% REL. COMPACTION (ASTM D1557).
7. FLOWLINE AT CURB RETURN SHALL SLOPE NOT LESS THAN 0.64% OR GREATER THAN 1.5%
8. RAMP SHALL BE SEPARATE POUR FROM CURB AND GUTTER (NOT MONOLITHIC POUR).

REVISIONS	DATE		CITY OF TULARE PUBLIC IMPROVEMENT STANDARD	
		CITY OF TULARE INCORPORATED APRIL 5, 1888	20' RADIUS CURB RETURN WITH ACCESSIBLE RAMP	DRAWING NO.: 4110
			Approved By: Michael W. Miller Date: 11/15/16 City Engineer	1 OF 1

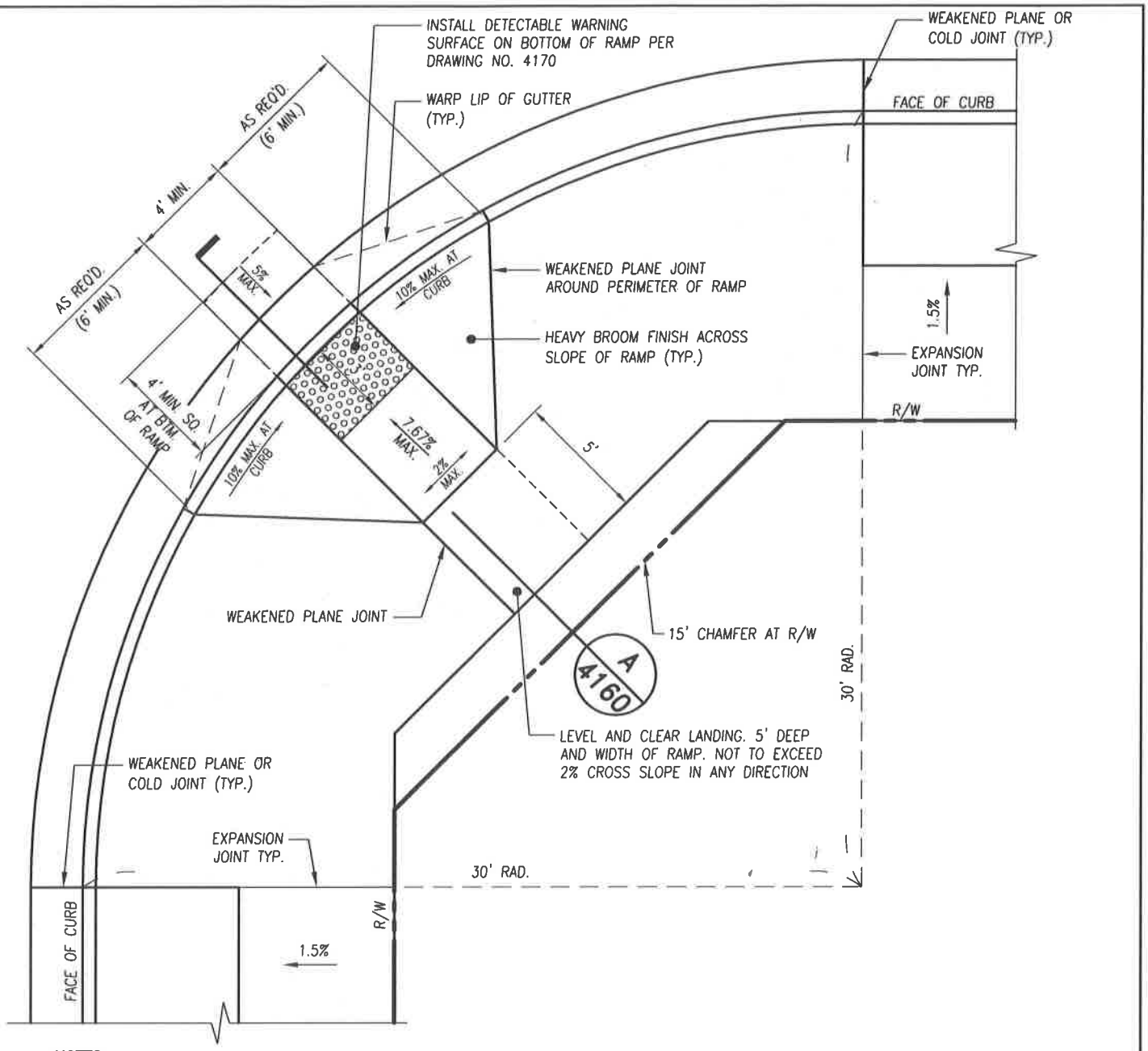

NOTES:

1. ALL RAMP CONCRETE SHALL BE CLASS 2 CONCRETE.
2. MAXIMUM SLOPES OF ADJOINING GUTTERS, THE ROAD SURFACE IMMEDIATELY ADJACENT TO THE CURB RAMP OR ACCESSIBLE ROUTE SHALL NOT EXCEED 5% WITHIN 4' OF THE BOTTOM OF THE CURB RAMP.
3. CROSS SLOPES SHALL NOT EXCEED 2%.
4. SHALL BE USED WHERE COLLECTORS INTERSECT OTHER COLLECTORS OR ARTERIALS AND INDUSTRIAL STREETS INTERSECT OTHER COLLECTORS.
5. THE EDGE OF THE DETECTABLE WARNING SURFACE NEAREST THE STREET SHALL BE BETWEEN 6" AND 8" FROM THE GUTTER FLOWLINE.
6. COMPACT UPPER 6" OF SUBGRADE UNDER ALL CONCRETE FROM BCR TO ECR TO 95 REL. COMPACTION (ASTM D1557).
7. FLOWLINE AT CURB RETURN SHALL SLOPE NOT LESS THAN 0.64% OR GREATER THAN 1.5%
8. RAMP SHALL BE SEPARATE POUR FROM CURB AND GUTTER (NOT MONOLITHIC POUR).

REVISIONS	DATE		CITY OF TULARE PUBLIC IMPROVEMENT STANDARD	
		CITY OF TULARE INCORPORATED APRIL 5, 1888	30' RADIUS CURB RETURN WITH ACCESSIBLE RAMP	DRAWING NO.: 4120
			Approved By: Michael W. Miller Date: 11/15/16 City Engineer	1 OF 1

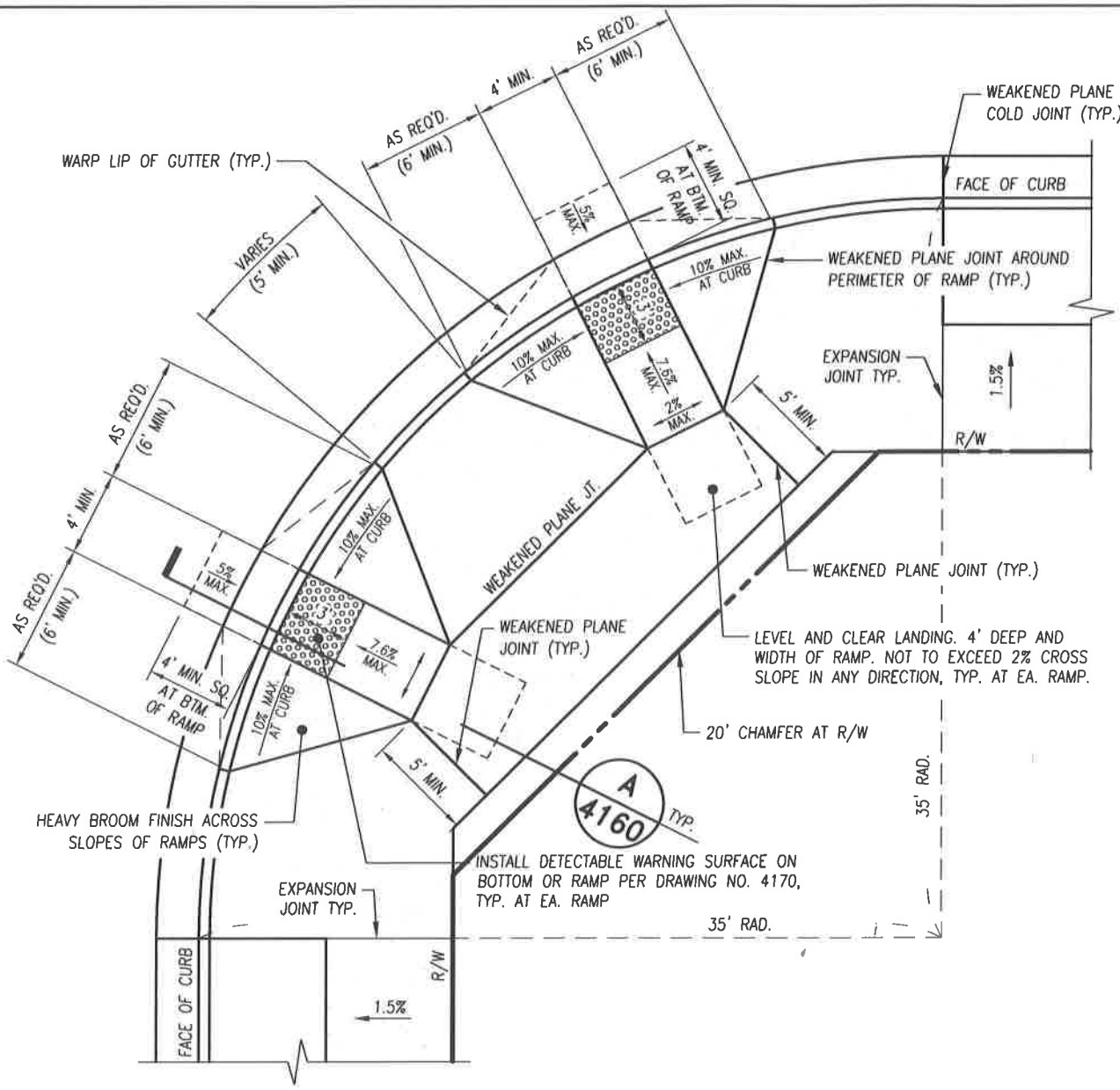

NOTES:

1. ALL RAMP CONCRETE SHALL BE CLASS 2 CONCRETE.
2. MAXIMUM SLOPES OF ADJOINING GUTTERS, THE ROAD SURFACE IMMEDIATELY ADJACENT TO THE CURB RAMP OR ACCESSIBLE ROUTE SHALL NOT EXCEED 5% WITHIN 4' OF THE BOTTOM OF THE CURB RAMP.
3. CROSS SLOPES SHALL NOT EXCEED 2%.
4. FOR SECTION AT RAMP SEE DWG. NO. 4150.
5. SHALL BE USED WHERE ARTERIALS INTERSECT OTHER ARTERIALS (MINOR AND MAJOR).
6. THE EDGE OF THE DETECTABLE WARNING SURFACE NEAREST THE STREET SHALL BE BETWEEN 6" AND 8" FROM THE GUTTER FLOWLINE.
7. COMPACT UPPER 6" OF SUBGRADE UNDER ALL CONCRETE FROM BCR TO ECR TO 95% REL. COMPACTION (ASTM D1557).
8. FLOWLINE AT CURB RETURN SHALL SLOPE NOT LESS THAN 0.64% OR GREATER THAN 1.5%
9. RAMP SHALL BE SEPARATE POUR FROM CURB AND GUTTER (NOT MONOLITHIC POUR).

REVISIONS	DATE

CITY OF TULARE INCORPORATED APRIL 5, 1888

CITY OF TULARE
PUBLIC IMPROVEMENT STANDARD

35' RADIUS CURB RETURN WITH ACCESSIBLE RAMPS

DRAWING NO.: 4130

Approved By: Michael W. Miller
Date: 11/15/16 City Engineer

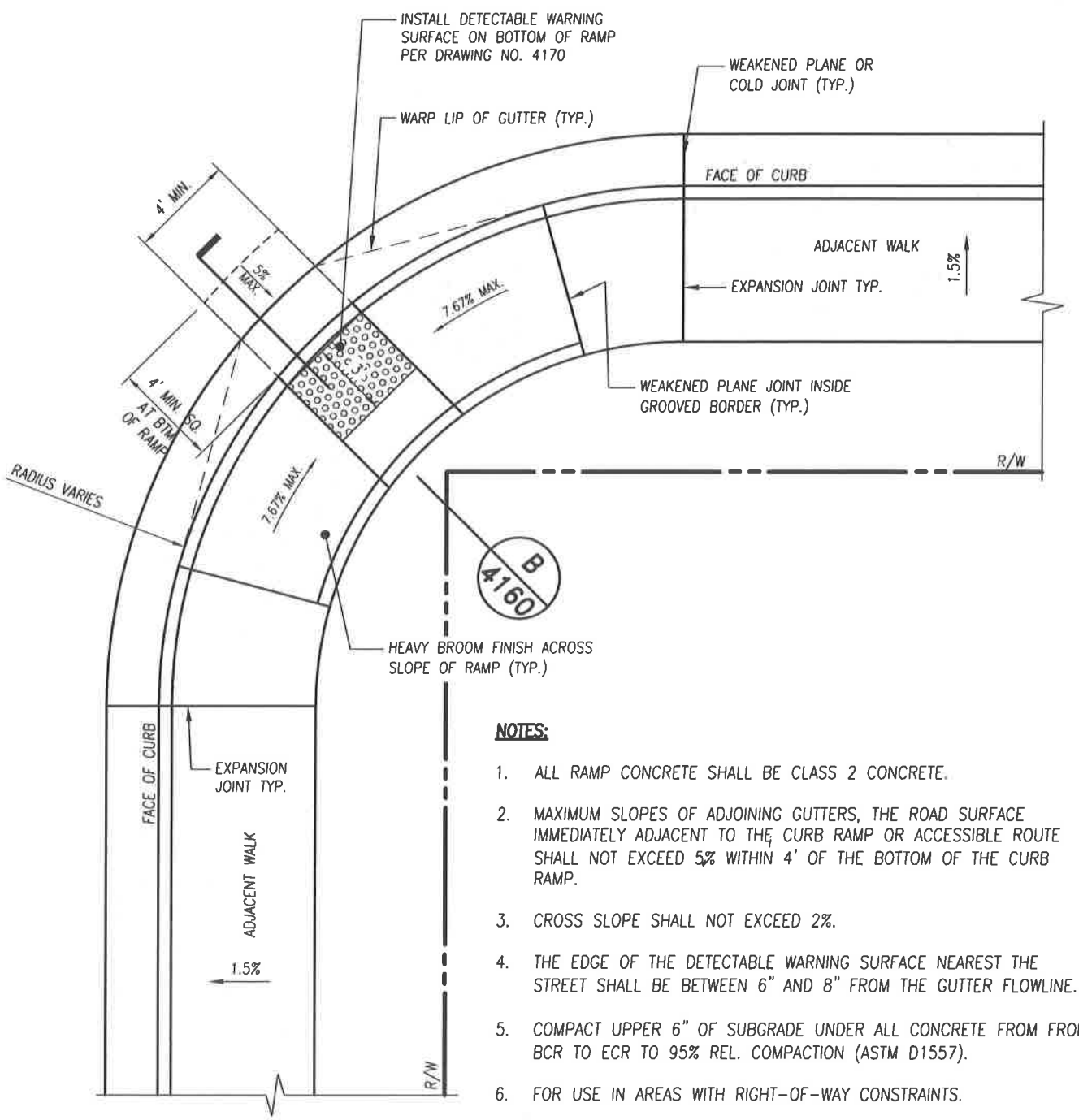

NOTES:

1. ALL RAMP CONCRETE SHALL BE CLASS 2 CONCRETE.
2. MAXIMUM SLOPES OF ADJOINING GUTTERS, THE ROAD SURFACE IMMEDIATELY ADJACENT TO THE CURB RAMP OR ACCESSIBLE ROUTE SHALL NOT EXCEED 5% WITHIN 4' OF THE BOTTOM OF THE CURB RAMP.
3. CROSS SLOPE SHALL NOT EXCEED 2%.
4. THE EDGE OF THE DETECTABLE WARNING SURFACE NEAREST THE STREET SHALL BE BETWEEN 6" AND 8" FROM THE GUTTER FLOWLINE.
5. COMPACT UPPER 6" OF SUBGRADE UNDER ALL CONCRETE FROM FROM BCR TO ECR TO 95% REL. COMPACTION (ASTM D1557).
6. FOR USE IN AREAS WITH RIGHT-OF-WAY CONSTRAINTS.
7. FLOWLINE AT CURB RETURN SHALL SLOPE NOT LESS THAN 0.64% OR GREATER THAN 1.5%
8. RAMP SHALL BE SEPARATE POUR FROM CURB AND GUTTER (NOT MONOLITHIC POUR).

REVISIONS	DATE

CITY OF TULARE
PUBLIC IMPROVEMENT STANDARD

PARALLEL ACCESSIBLE RAMP AT CURB RETURN

DRAWING NO.: 4140

Approved By: Michael W. Miller
Date: 11/15/16 City Engineer

1 OF 1

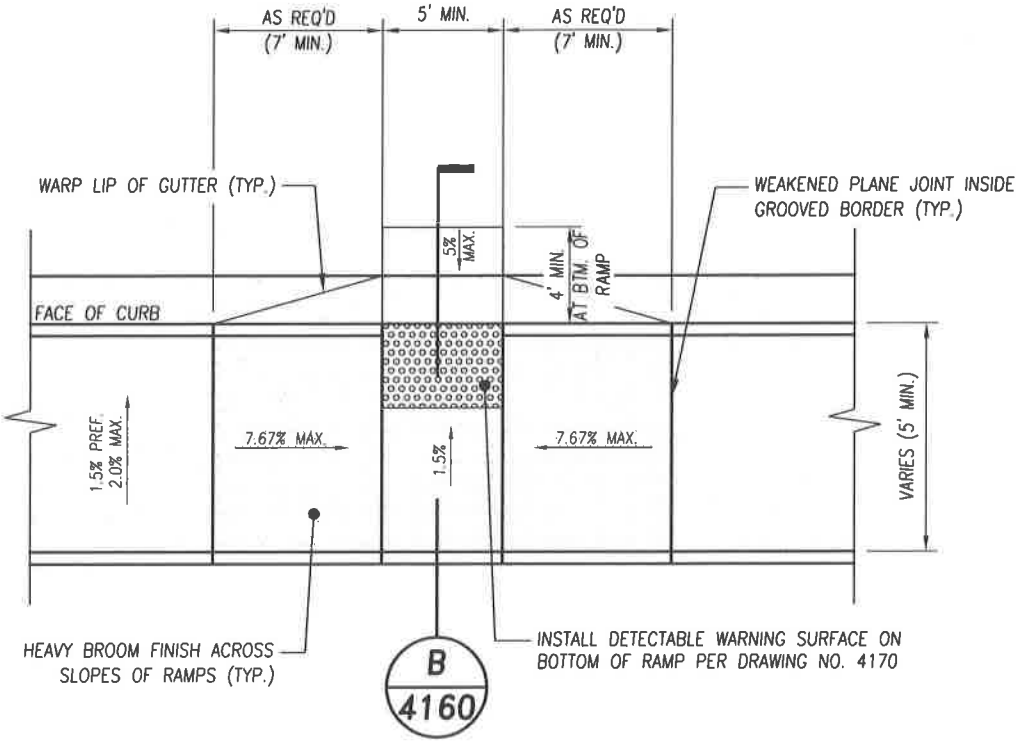

PLAN VIEW

NOTES:

1. ALL RAMP CONCRETE SHALL BE CLASS 2 CONCRETE.
2. MAXIMUM SLOPES OF ADJOINING GUTTERS, THE ROAD SURFACE IMMEDIATELY ADJACENT TO THE CURB RAMP OR ACCESSIBLE ROUTE SHALL NOT EXCEED 5% WITHIN 4' OF THE BOTTOM OF THE CURB RAMP.
3. CROSS SLOPES SHALL NOT EXCEED 2%.
4. THE EDGE OF THE DETECTABLE WARNING SURFACE NEAREST THE STREET SHALL BE ADJACENT TO THE FLOWLINE.
5. COMPACT UPPER 6" OF SUBGRADE UNDER RAMP TO 95% REL. COMPACTION (ASTM D1557).
6. FOR USE IN AREAS WITH CROSSING WHERE NO CURB RETURN EXISTS.
7. NO MONOLITHIC POUR WITH GUTTER.

REVISIONS	DATE		CITY OF TULARE PUBLIC IMPROVEMENT STANDARD	
		CITY OF TULARE INCORPORATED APRIL 5, 1888	PARALLEL ACCESSIBLE RAMP	DRAWING NO.: 4150
			Approved By: Michael W. Miller Date: 11/15/16 City Engineer	1 OF 1

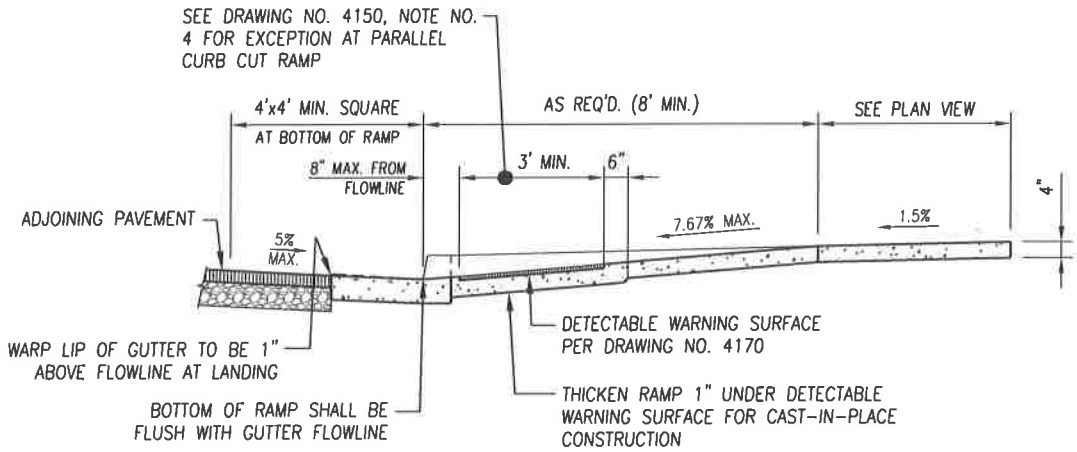

SECTION A

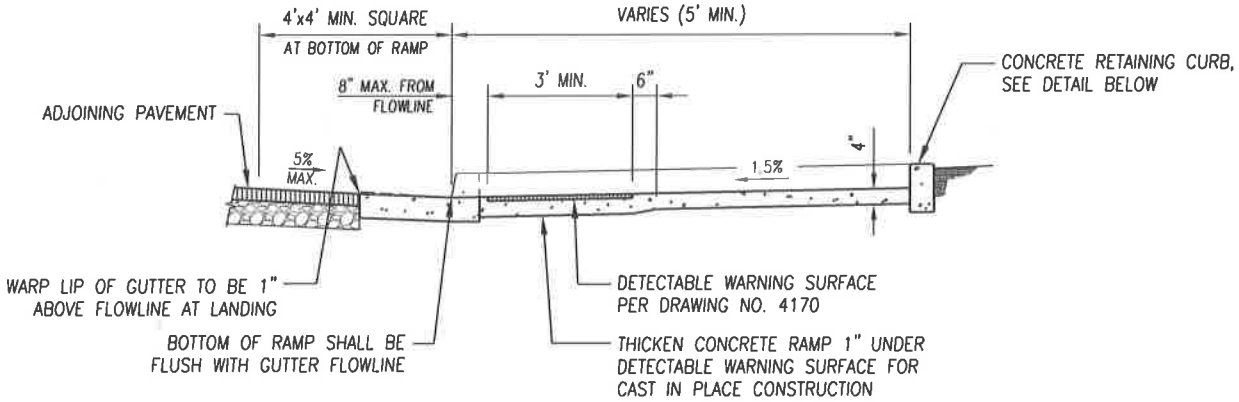

SECTION B

NOTES:

1. ALL RAMP CONCRETE SHALL BE CLASS 2 CONCRETE.
2. MAXIMUM SLOPES OF ADJOINING GUTTERS, THE ROAD SURFACE IMMEDIATELY ADJACENT TO THE CURB RAMP OR ACCESSIBLE ROUTE SHALL NOT EXCEED 5% WITHIN 4' OF THE BOTTOM OF THE CURB RAMP.
3. CROSS SLOPES SHALL NOT EXCEED 2%.
4. SHALL BE USED WHERE ARTERIALS INTERSECT OTHER ARTERIALS (MINOR AND MAJOR).
5. THE EDGE OF THE DETECTABLE WARNING SURFACE NEAREST THE STREET SHALL BE BETWEEN 6" AND 8" FROM THE GUTTER FLOWLINE.
6. COMPACT UPPER 6" OF SUBGRADE UNDER RAMP TO 95% REL. COMPACTION (ASTM D1557).
7. AT ARTERIAL-ARTERIAL INTERSECTIONS THE THICKNESS OF THE SLOPED RAMPS SHALL BE 6".

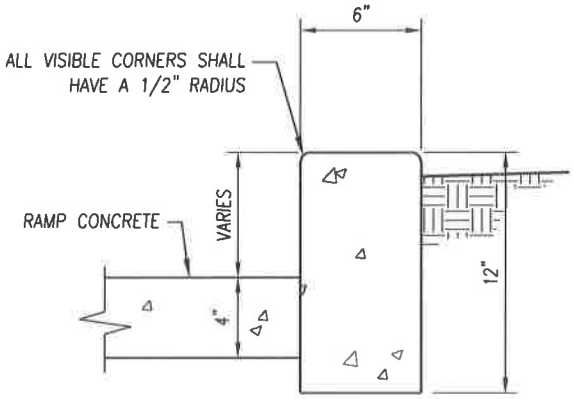

RETAINING CURB

REVISIONS	DATE

CITY OF TULARE
PUBLIC IMPROVEMENT STANDARD

ACCESSIBLE RAMP SECTIONS

DRAWING NO.: 4160

Approved By: Michael W. Miller
Date: 11/15/16 City Engineer

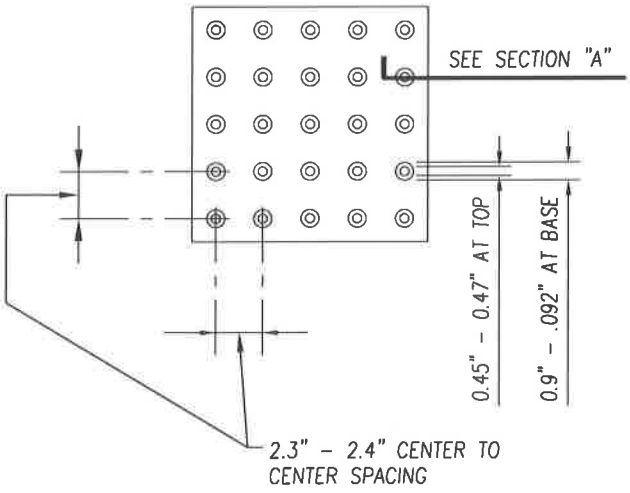

TRUNCATED DOME PANEL

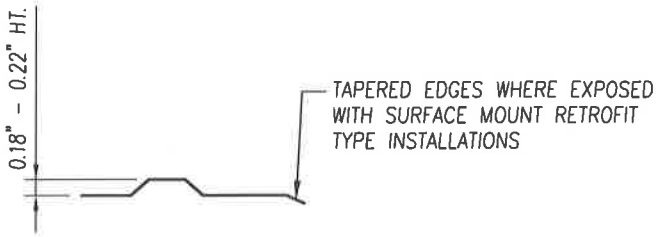

SECTION "A"

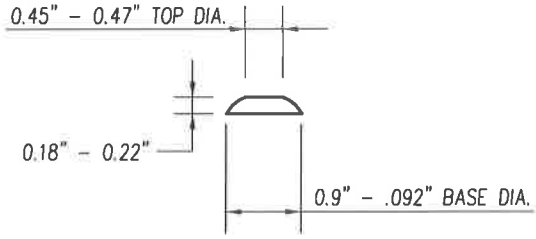

RAISED TRUNCATED DOME

NOTES:

1. DETECTABLE WARNING TACTILE PANELS SHALL BE "FEDERAL YELLOW" COLOR AND SHALL BE AN INTEGRALLY COLORED POLYMER CONCRETE, POLYMER CEMENT MATERIAL, OR FLEXIBLE CEMENT
2. SEE PLAN FOR WIDTH OF DETECTABLE WARNING SURFACE. WARNING SURFACE SHALL BE 3 FEET DEEP IN THE DIRECTION OF TRAVEL.
3. WHERE NEW CONCRETE AND RAMPS ARE BEING INSTALLED, DETECTABLE WARNING PANELS SHALL BE SET IN WET CONCRETE IN ACCORDANCE WITH THE MANUFACTURER'S RECOMMENDATIONS, EDGES OF THE PANELS SHALL BE FLUSH WITH THE ADJACENT CONCRETE SURFACE.
4. ON EXISTING SURFACES, RETROFIT TYPE PANELS SHALL BE GLUED AND/OR BOLTED IN ACCORDANCE WITH MANUFACTURES RECOMMENDATIONS. BOTTOM OF PANELS SHALL BE FLUSH AGAINST THE ADJACENT CONCRETE SURFACE.

REVISIONS	DATE		CITY OF TULARE PUBLIC IMPROVEMENT STANDARD	
		CITY OF TULARE INCORPORATED APRIL 5, 1888	DETECTABLE WARNING SURFACE	DRAWING NO.: 4170
			Approved By: Michael W. Miller Date: 11/15/16 City Engineer	1 OF 1

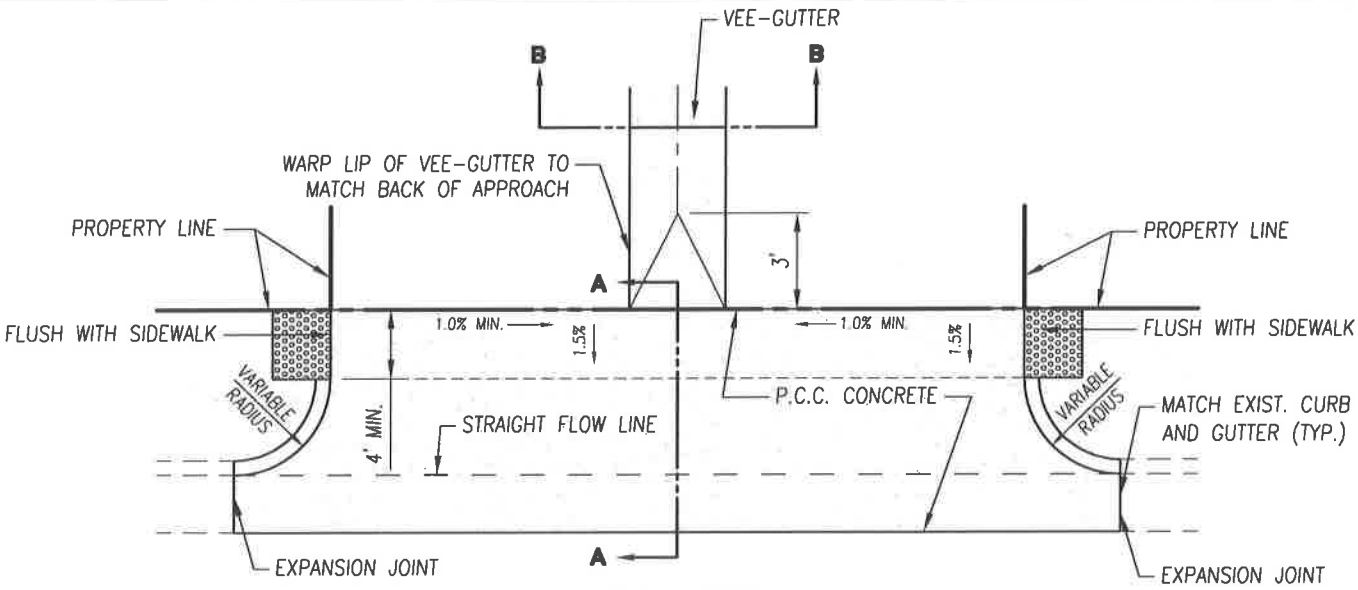

PLAN VIEW

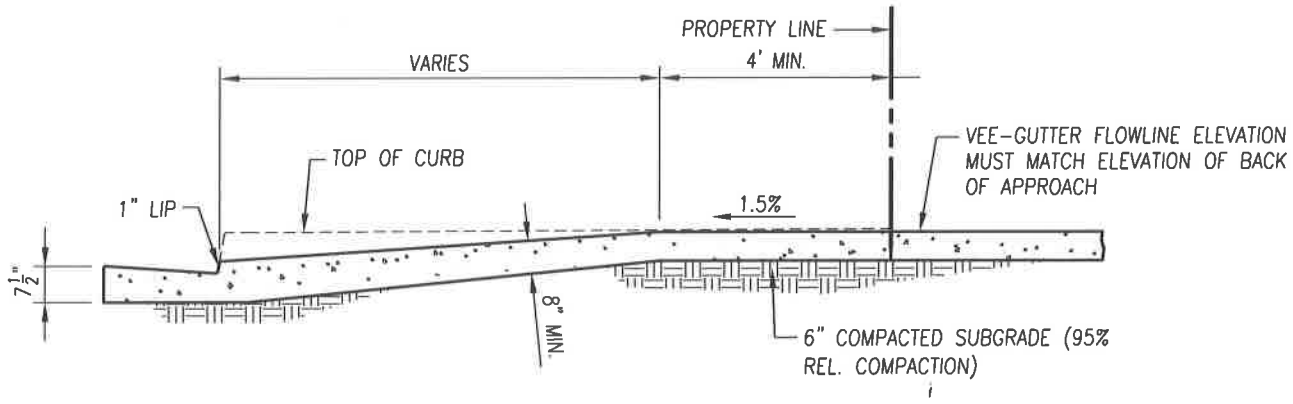

SECTION A–A

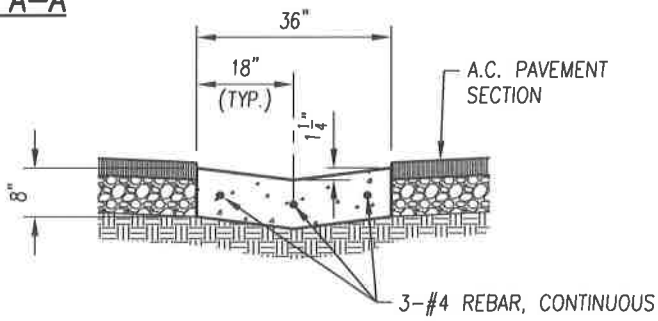

SECTION B–B

NOTES:

1. THE UPPER 6" OF SUBGRADE SHALL BE COMPACTED TO 95% RELATIVE COMPACTION (ASTM D1557).
2. ALL CONCRETE SHALL BE CLASS 2 CONCRETE.
3. CURB AND GUTTER SECTIONS SHALL CONFORM TO CITY OF TULARE STANDARD CURB & GUTTER.

REVISIONS	DATE		CITY OF TULARE PUBLIC IMPROVEMENT STANDARD	
		CITY OF TULARE INCORPORATED APRIL 5, 1888	ALLEY CROSS GUTTER AND VEE-GUTTER	DRAWING NO.: 4210
			Approved By: Michael W. Miller Date: 11/15/16 City Engineer	1 OF 1

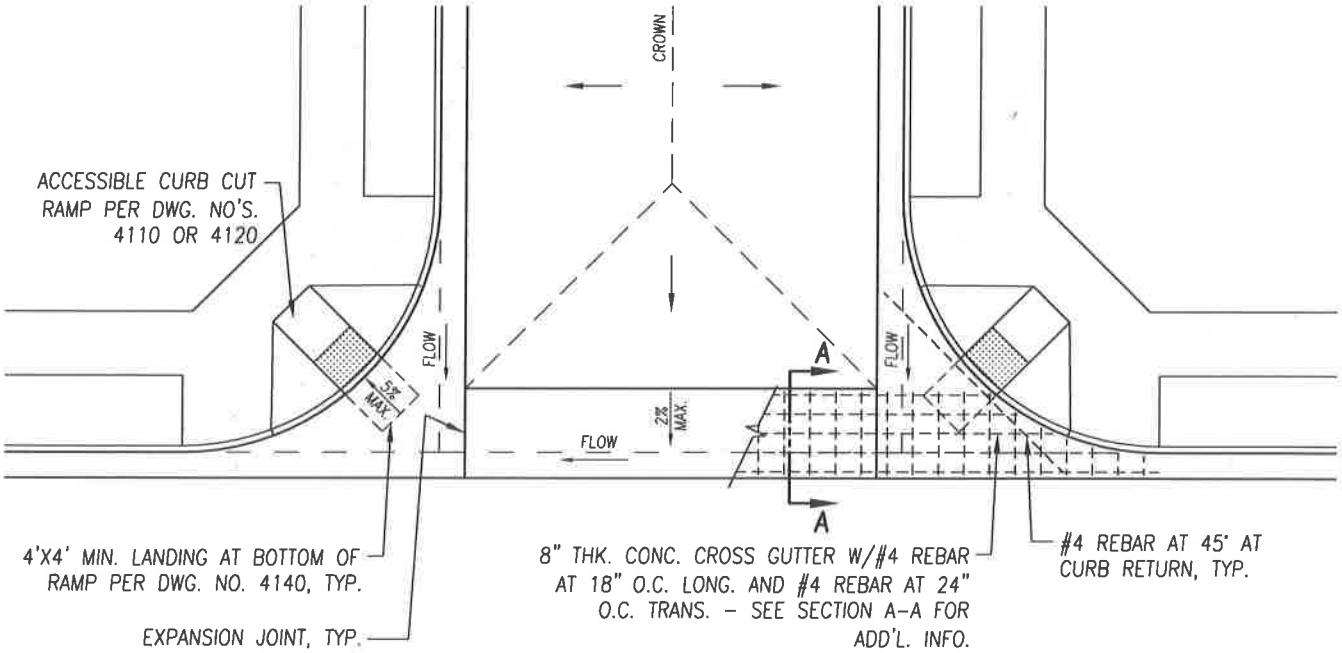

PLAN VIEW

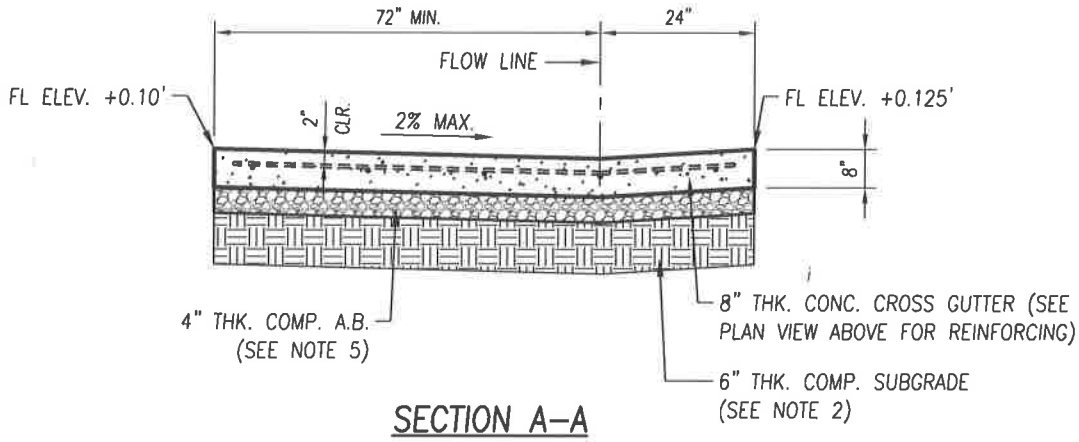

SECTION A-A

NOTE:

1. ALL CONCRETE SHALL BE CLASS 2 CONCRETE.
2. SUBGRADE SHALL BE THOROUGHLY WATERED AND ROLLED OR TAMPED TO 95% RELATIVE COMPACTION.
3. WIDER CROSS GUTTER MAY BE REQUIRED.
4. THE VALLEY GUTTER SHALL HAVE A MINIMUM SLOPE OF .0030 FT/FT. IN THE DIRECTION OF FLOW.
5. BASE SHALL BE 4 INCHES CLASS 2 AGGREGATE BASE, TO 95% RELATIVE COMPACTION PER ASTM D1557.
6. CROSS GUTTER SHALL BE SEPARATE POUR FROM RAMPS.

REVISIONS	DATE		CITY OF TULARE PUBLIC IMPROVEMENT STANDARD	
		CITY OF TULARE INCORPORATED APRIL 5, 1888	STREET CROSS GUTTER	DRAWING NO.: 4220
			Approved By: Michael W. Miller Date: 11/15/16 City Engineer	1 OF 1

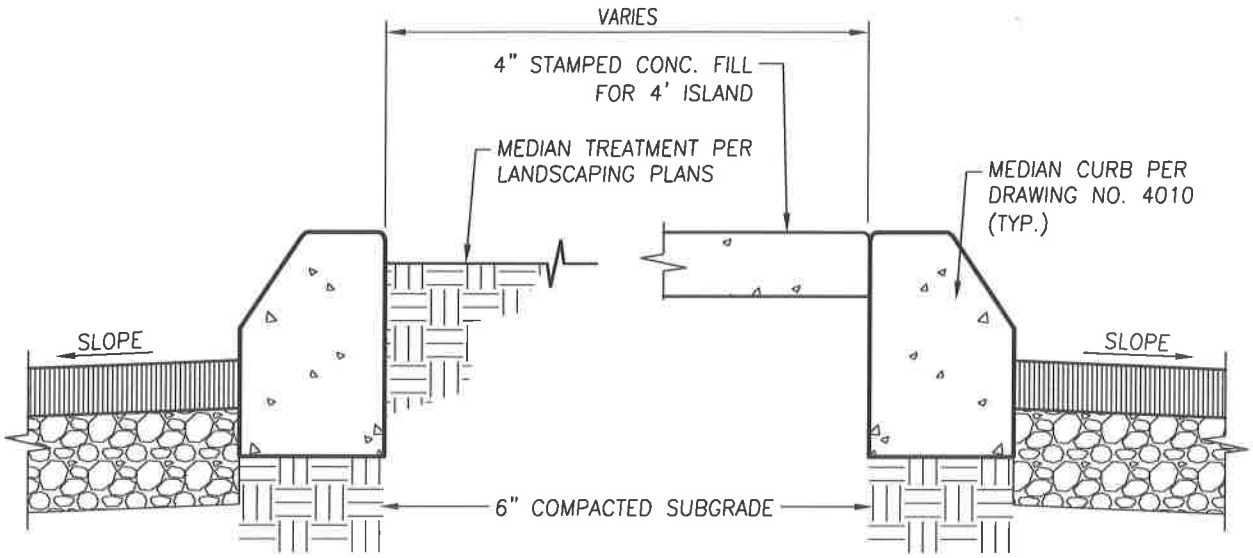

NOTES:

1. CONCRETE IN MEDIAN ISLAND SHALL RECEIVE A SOFT BROOM FINISH.
2. PLACE EXPANSION JOINTS AT BEGINNING AND ENDS OF CURVES AND EVERY 15 FEET.
3. USE APPROVED PIGMENTED SEALING COMPOUND FOR CURING.
4. MEDIAN ISLAND CONCRETE SHALL BE CLASS 2. MEDIAN CURB CONCRETE SHALL BE PER DRAWING NO. 4010.
5. THE COLOR AND PATTERN OF THE MEDIAN CONCRETE SHALL BE AS PER THE DIRECTION OF THE CITY ENGINEER.

REVISIONS	DATE		CITY OF TULARE PUBLIC IMPROVEMENT STANDARD	
		CITY OF TULARE 1888 INCORPORATED APRIL 5,	MEDIAN ISLAND	DRAWING NO.:
			Approved By: Michael W. Miller Date: 11/15/16 City Engineer	4310 1 OF 1

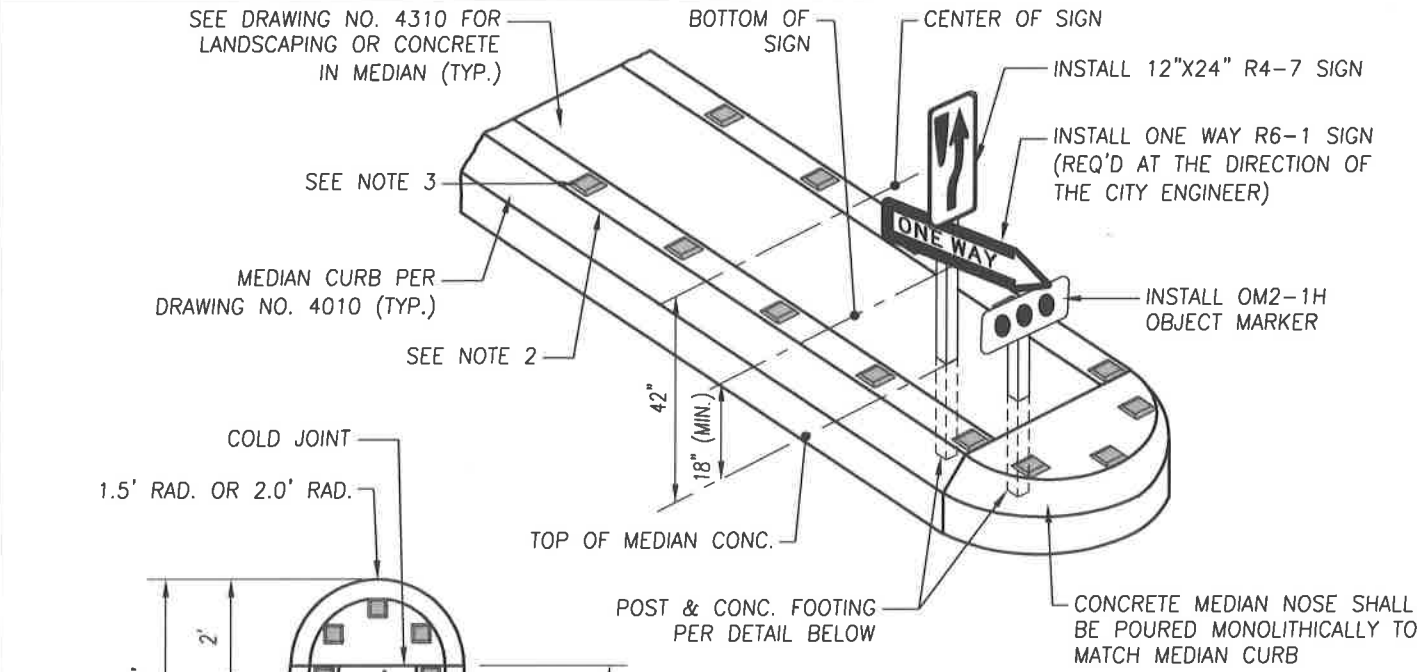

ISOMETRIC VIEW

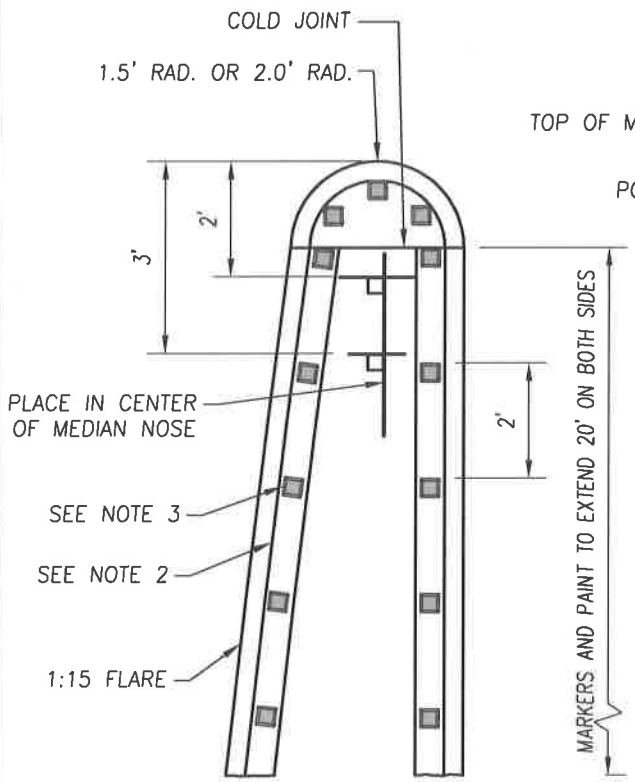

PLAN VIEW

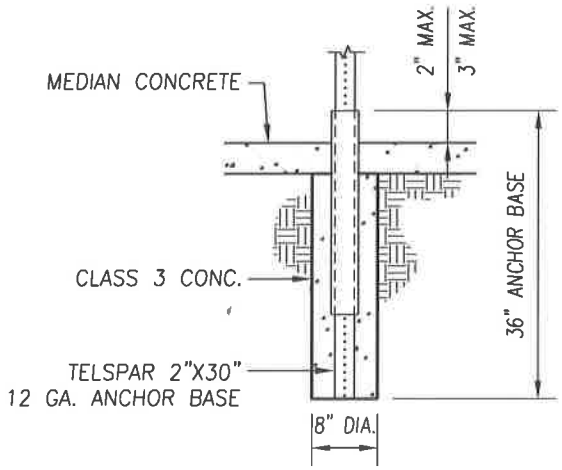

FOOTING DETAIL

NOTES:

1. MEDIAN ISLAND CONCRETE SHALL BE PER DRAWING NO. 4310. MEDIAN CURB CONCRETE SHALL BE PER DRAWING NO. 4010.
2. THE TOP AND FACE OF THE CURB SHALL BE PAINTED WITH YELLOW WATERBORNE PAINT. APPLY GLASS BEADS FOR RETROREFLECTIVITY IN ACCORDANCE WITH CALTTRANS STANDARD SPECIFICATION SECTION 84-3.
3. INSTALL TYPE G OR TYPE D RAISED PAVEMENT MARKERS PER CALTRANS STANDARD SPECFICATION SECTION 85-102C. RAISED PAVEMENT MARKERS SHALL BE ATTACHED TO THE TOP OF THE CURB USING ADHESIVES PER CALTRANS STANDARD SPECIFCATION SECTIONS 85-1.02D AND 85-1.02E.
4. SIGN POSTS SHALL BE 12 GAUGE TELSPAR SQUARE TUBING (1¾") WITH 7/16" PRE-PUNCHED HOLES.
5. COLD JOINTS SHALL BE PLACED AT 15' INTERVALS ALONG MEDIAN CURBING.

REVISIONS	DATE

CITY OF TULARE INCORPORATED APRIL 5, 1888

CITY OF TULARE
PUBLIC IMPROVEMENT STANDARD

3' OR 4' MEDIAN NOSE

DRAWING NO.: 4315

Approved By: Michael W. Miller
Date: 11/15/16 City Engineer

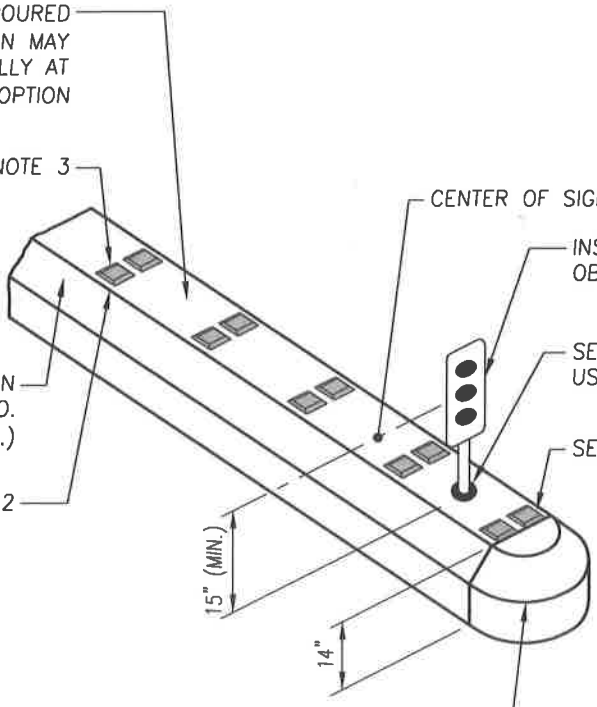

ISOMETRIC VIEW

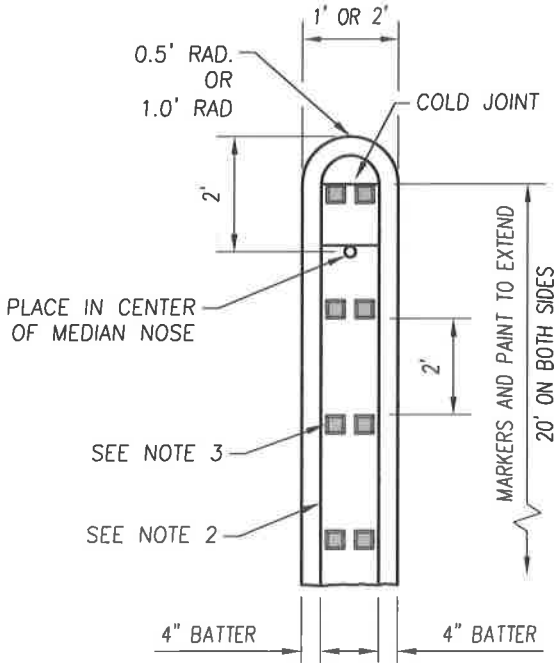

PLAN VIEW

NOTES:

1. ALL CONCRETE SHALL BE CLASS 2 CONCRETE.
2. THE TOP AND FACE OF THE CURB SHALL BE PAINTED WITH YELLOW WATERBORNE PAINT. APPLY GLASS BEADS FOR RETROREFLECTIVITY IN ACCORDANCE WITH CALTTRANS STANDARD SPECIFICATION SECTION 84-3.
3. INSTALL TYPE G OR TYPE D RAISED PAVEMENT MARKERS PER CALTRANS STANDARD SPECFICATION SECTION 85-102C. RAISED PAVEMENT MARKERS SHALL BE ATTACHED TO THE TOP OF THE CURB USING ADHESIVES PER CALTRANS STANDARD SPECIFCATION SECTIONS 85-1.02D AND 85-1.02E.
4. COLD JOINTS SHALL BE PLACED AT 15' INTERVALLS ALONG MEDIAN CURBING.

REVISIONS	DATE

CITY OF TULARE
PUBLIC IMPROVEMENT STANDARD

1' OR 2' MEDIAN NOSE

DRAWING NO.: 4316

Approved By: Michael W. Miller
Date: 11/15/16 City Engineer

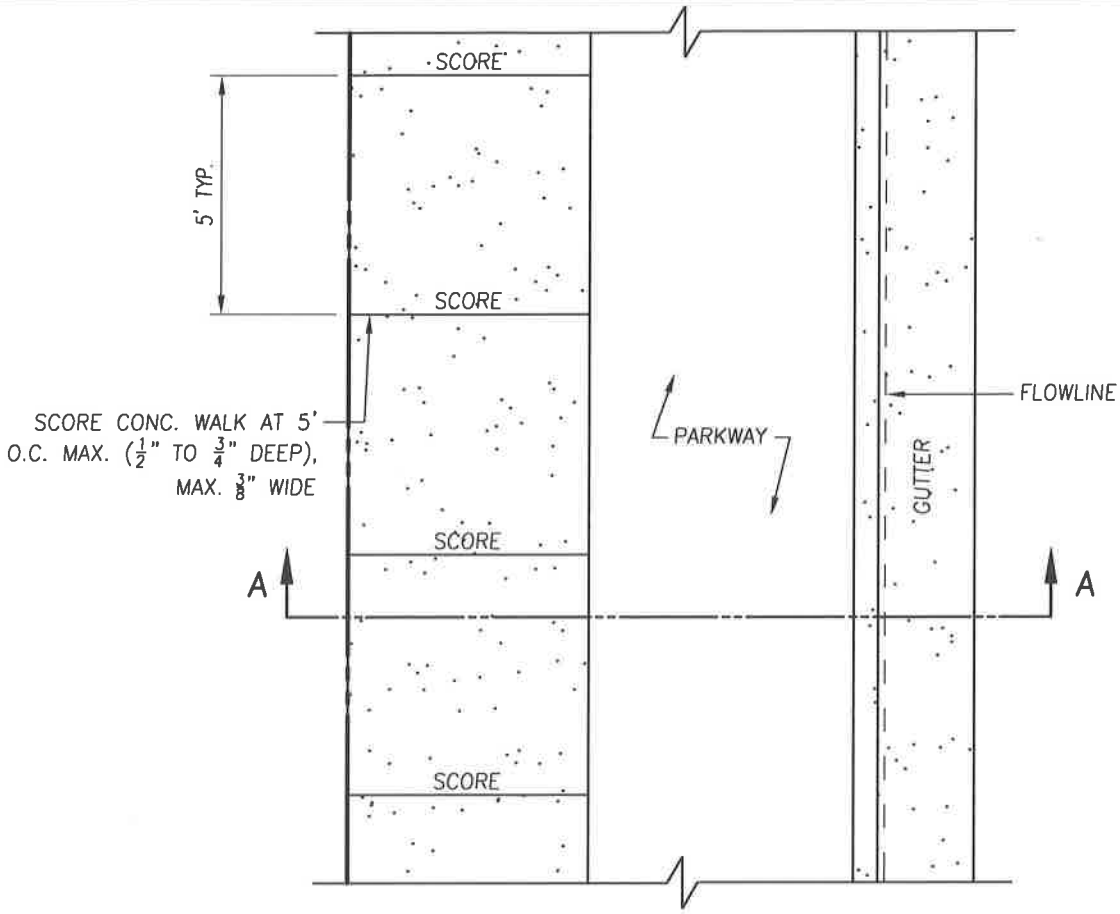

PLAN VIEW

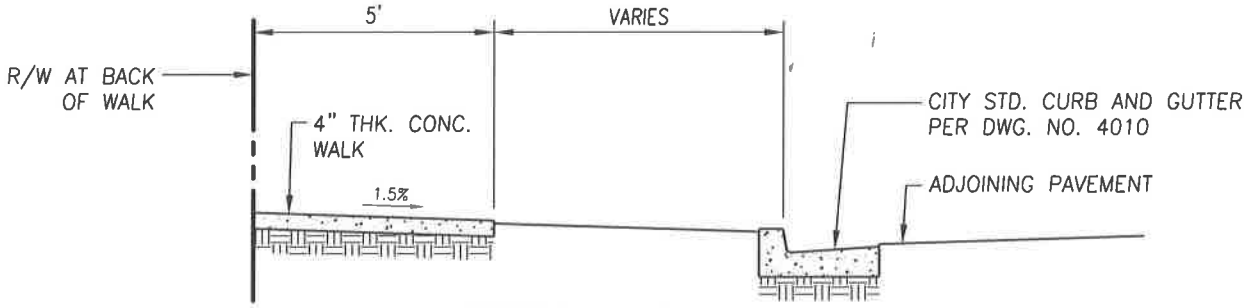

SECTION A–A

NOTES:

1. SIDEWALK SHALL BE CLASS 3 CONCRETE.
2. SIDEWALK SHALL BE WIDENED AT STREET FIXTURE LOCATIONS, AS NECESSARY PROVIDING A MINIMUM CLEARANCE SIMILAR TO DRAWING NO. 4420, "PLAN VIEW WITH STREET FIXTURE", OR AS APPROVED BY CITY ENGINEER.
3. SCORED JOINTS IN SIDEWALKS SHALL COINCIDE WITH JOINTS IN CURB AND GUTTER WHERE POSSIBLE.
4. COMPACT UPPER 6" OF SUBGRADE UNDER SIDEWALK TO 90% REL. COMPACTION (ASTM D1557).

REVISIONS	DATE		CITY OF TULARE PUBLIC IMPROVEMENT STANDARD	
			SIDEWALK - RESIDENTIAL WITH PARKWAY	DRAWING NO.: 4410
			Approved By: Michael W. Miller Date: 11/15/16 City Engineer	1 OF 1

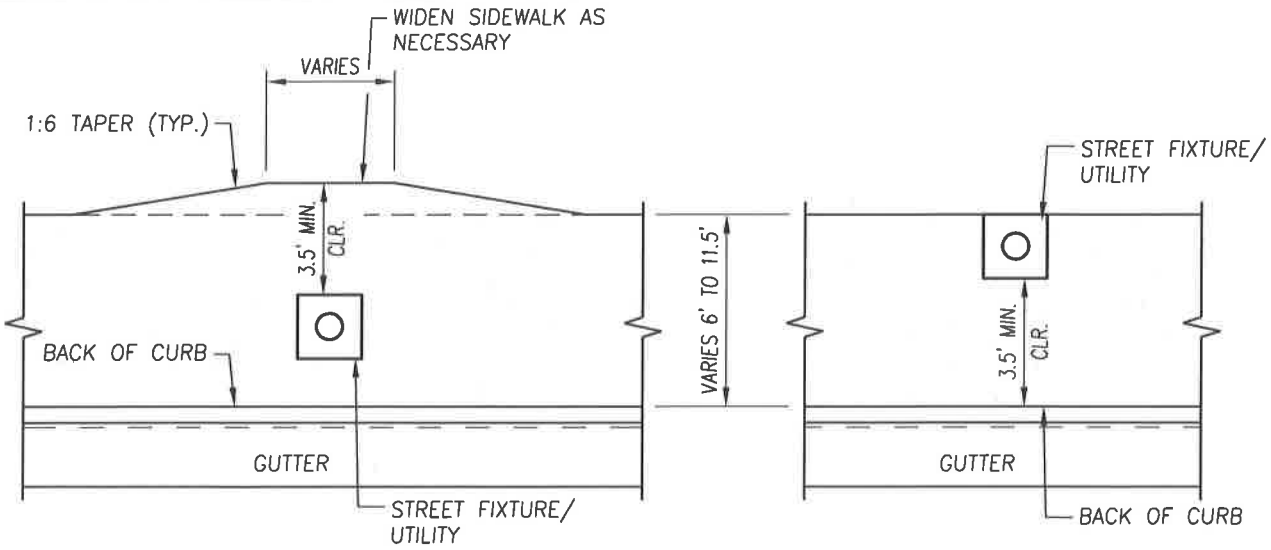

PLAN VIEW WITH STREET FIXTURE

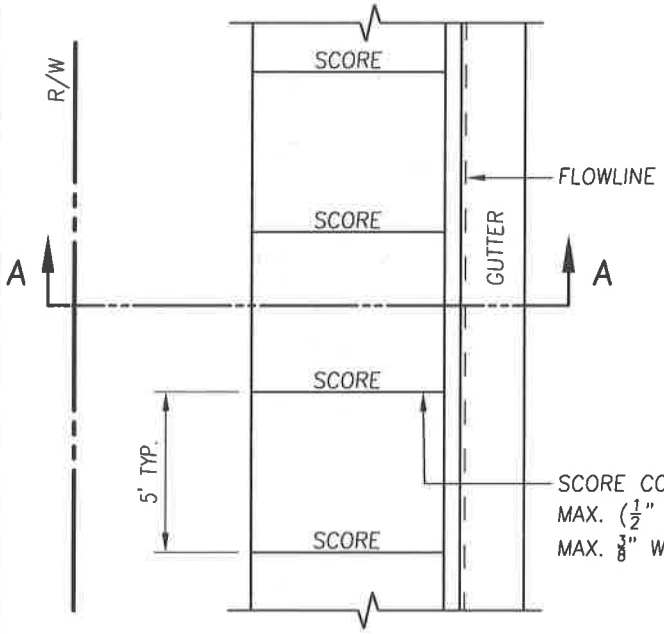

PLAN VIEW

NOTES:

1. SIDEWALK SHALL BE CLASS 3 CONCRETE.
2. SIDEWALK SHALL BE WIDENED AT STREET FIXTURE OR UTILITY STRUCTURE LOCATIONS PROVIDING A MINIMUM CLEARANCE SHOWN ON PLAN VIEW, OR AS APPROVED BY CITY ENGINEER.
3. SCORED JOINTS IN SIDEWALKS SHALL COINCIDE WITH JOINTS IN CURB AND GUTTER WHERE POSSIBLE. COMPACTION TESTING AND APPROVAL REQUIRED PRIOR TO POUR.
4. COMPACT UPPER 6" OF SUBGRADE UNDER SIDEWALK TO 90% REL. COMPACTION (ASTM D1557).

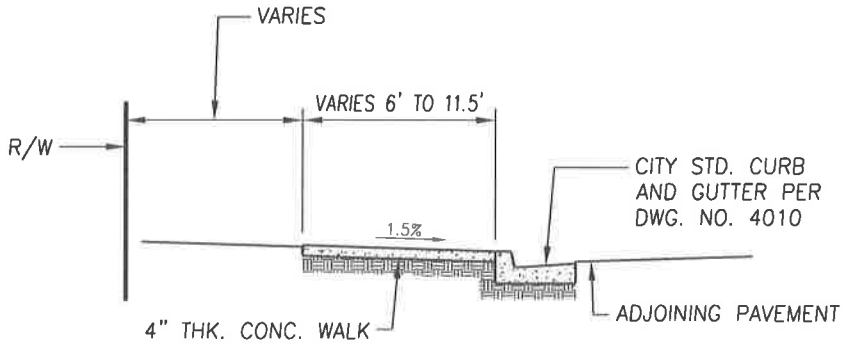

SECTION A–A

REVISIONS	DATE

CITY OF TULARE
PUBLIC IMPROVEMENT STANDARD

SIDEWALK - INDUSTRIAL/COMMERICAL ADJACENT TO CURB

DRAWING NO.: 4420

Approved By: Michael W. Miller
Date: 11/15/16 City Engineer

1 OF 1

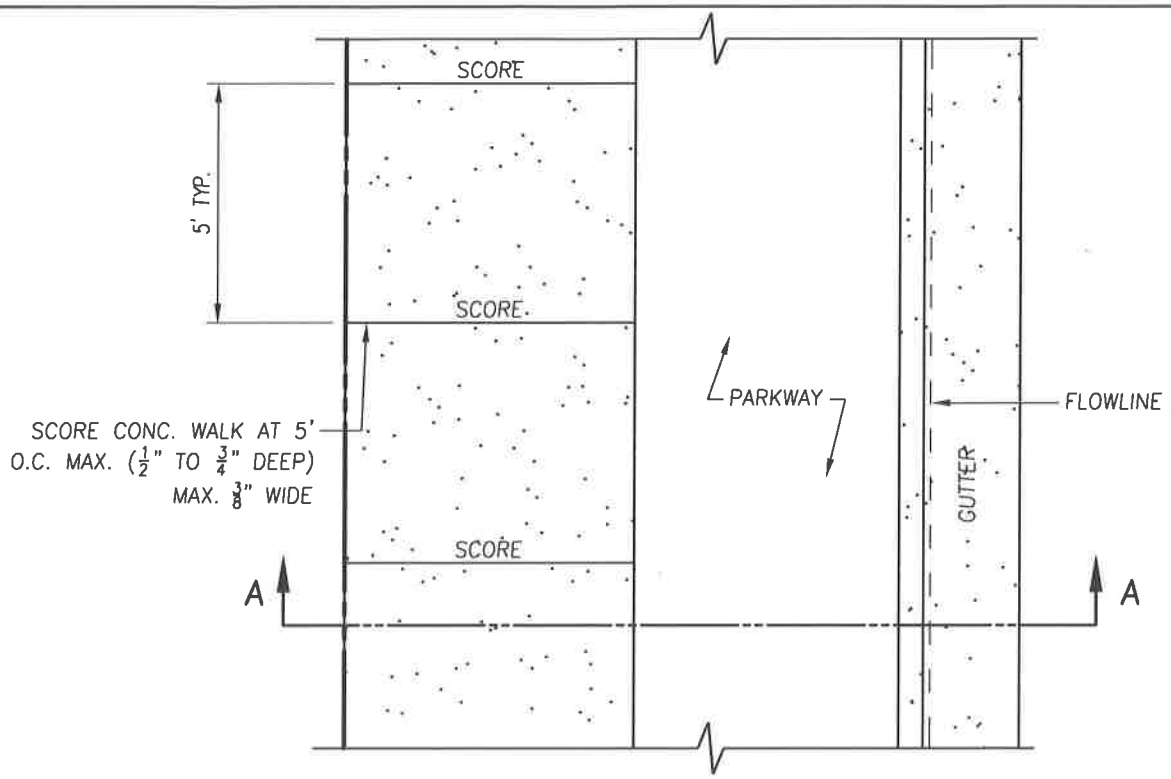

PLAN VIEW

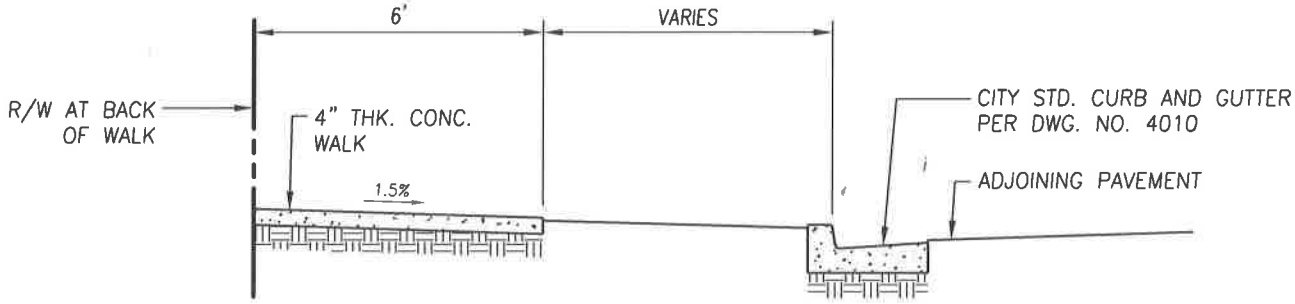

SECTION A–A

NOTES:

1. SIDEWALK SHALL BE CLASS 3 CONCRETE.
2. SIDEWALK SHALL BE WIDENED AT STREET FIXTURE AND UTILITY STRUCTURE LOCATIONS AS NECESSARY, PROVIDING A MINIMUM CLEARANCE SIMILAR TO DRAWING NO. 4420, "PLAN VIEW WITH STREET FIXTURE", OR AS APPROVED BY CITY ENGINEER.
3. SCORED JOINTS IN SIDEWALKS SHALL COINCIDE WITH JOINTS IN CURB AND GUTTER WHERE POSSIBLE. COMPACTION TESTING AND APPROVAL REQUIRED PRIOR TO POUR.
4. COMPACT UPPER 6" OF SUBGRADE UNDER SIDEWALK TO 90% REL. COMPACTION (ASTM D1557).

REVISIONS	DATE		CITY OF TULARE PUBLIC IMPROVEMENT STANDARD	
		CITY OF TULARE INCORPORATED APRIL 5, 1888	SIDEWALK - INDUSTRIAL/COMMERCIAL WITH PARKWAY	DRAWING NO.: 4430
			Approved By: Michael W. Miller Date: 11/15/16 City Engineer	1 OF 1

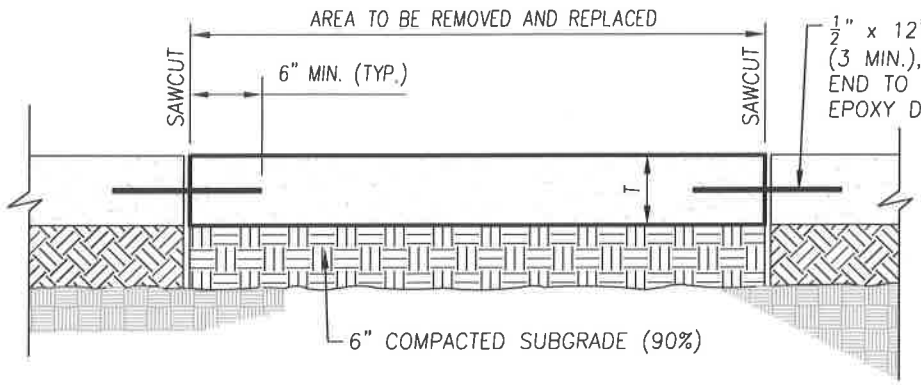

$\frac{1}{2}$" x 12" SMOOTH BARS @ 24" O.C. IN SIDEWALK (3 MIN.), ONE EACH IN CURB AND GUTTER ONE END TO BE SLEEVED OR GREASED. DRILL AND EPOXY DOWELS INTO EXISTING CURB AND GUTTER

SIDEWALK SECTION

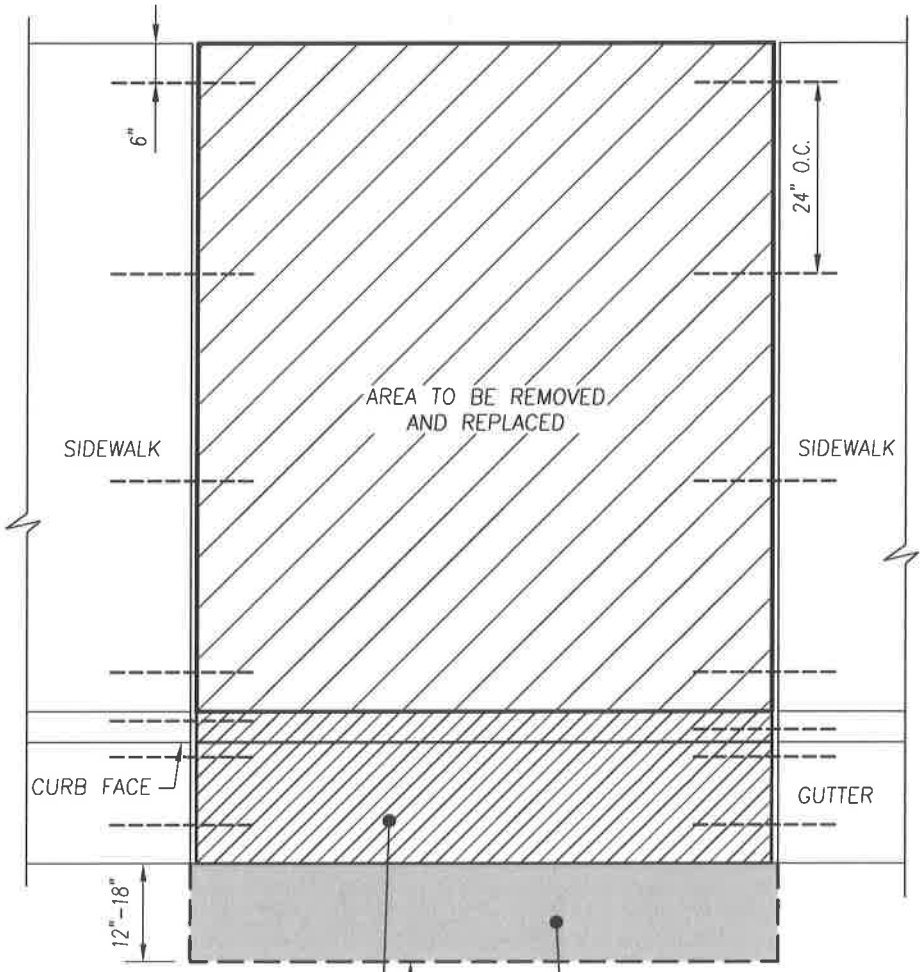

SEE DWG. NO. 4911 FOR DOWELS AT CURB AND GUTTER

STREET

SAWCUT PAVEMENT

THICKNESS OF PAVEMENT SECTION REPAIR SHALL BE AS REQUIRED BY THE CITY ENGINEER

PLAN VIEW OF CURB, GUTTER & SIDEWALK

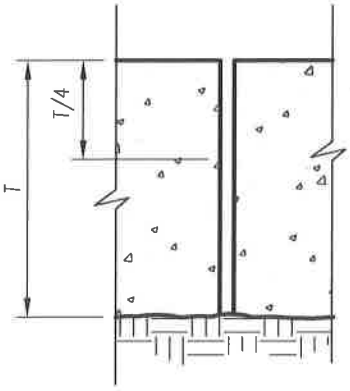

ALL CUTS TO BE MADE WITH WITH AN ABRASIVE-TYPE CUTTING WHEEL.

REMAINING EDGE TO BE SMOOTH AND TRUE WITH NO SHATTER. DEPTH OF CUT=T/4, $1\frac{1}{2}$" MIN.

CUT DETAIL

NOTES:

1. COMPLETE SECTION OF CURB SHALL BE REMOVED AS REQUIRED BY THE CITY ENGINEER.
2. EXTENTS OF SIDEWALK REMOVAL AND RESTORATION SHALL BE AS DETERMINED BY THE CITY ENGINEER.
3. SAWCUTS SHALL BE AT SIDEWALK SCORE LINES UNLESS OTHERWISE APPROVED BY THE CITY ENGINEER
4. COMPACT UPPER 6" OF SUBGRADE UNDER SIDEWALK TO 90% REL. COMPACTION (ASTM D1557). COMPACTION TEST AND APPROVAL REQUIRED BEFORE POUR.
5. ALL CONCRETE SHALL BE CLASS 2.

REVISIONS	DATE		CITY OF TULARE PUBLIC IMPROVEMENT STANDARD	
		CITY OF TULARE INCORPORATED APRIL 5, 1888	SIDEWALK REPAIR	DRAWING NO.: 4910
			Approved By: Michael W. Miller Date: 11/15/16 City Engineer	1 OF 1

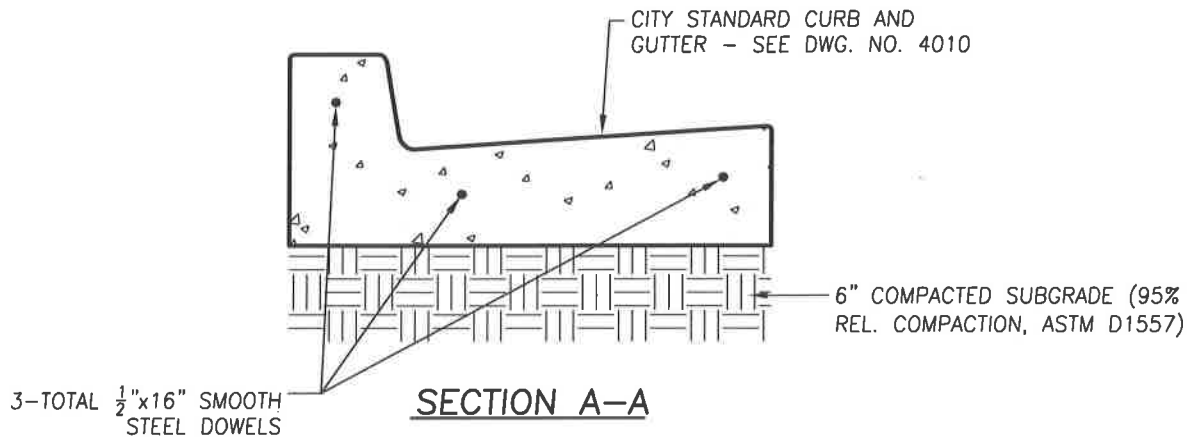

SECTION A–A

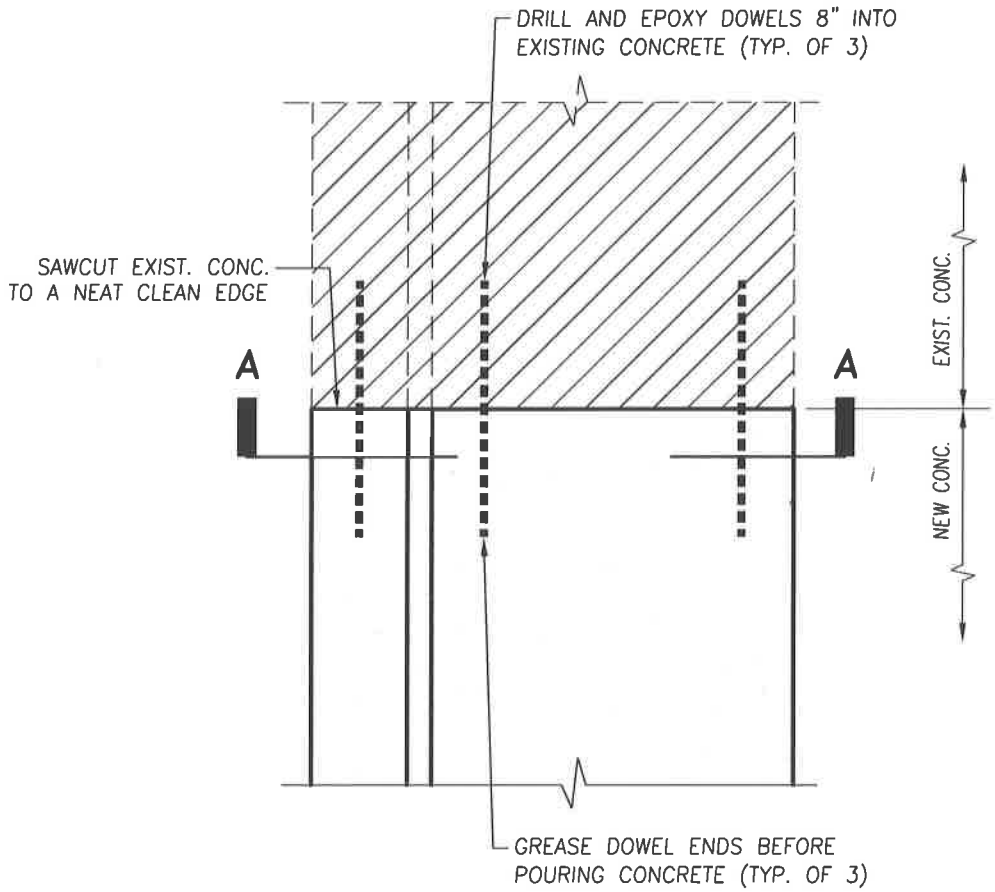

PLAN VIEW AT CURB AND GUTTER

REVISIONS	DATE		CITY OF TULARE PUBLIC IMPROVEMENT STANDARD	
			CURB AND GUTTER REPAIR	DRAWING NO.:
			Approved By: Michael W. Miller Date: 11/15/16 City Engineer	4911 1 OF 1

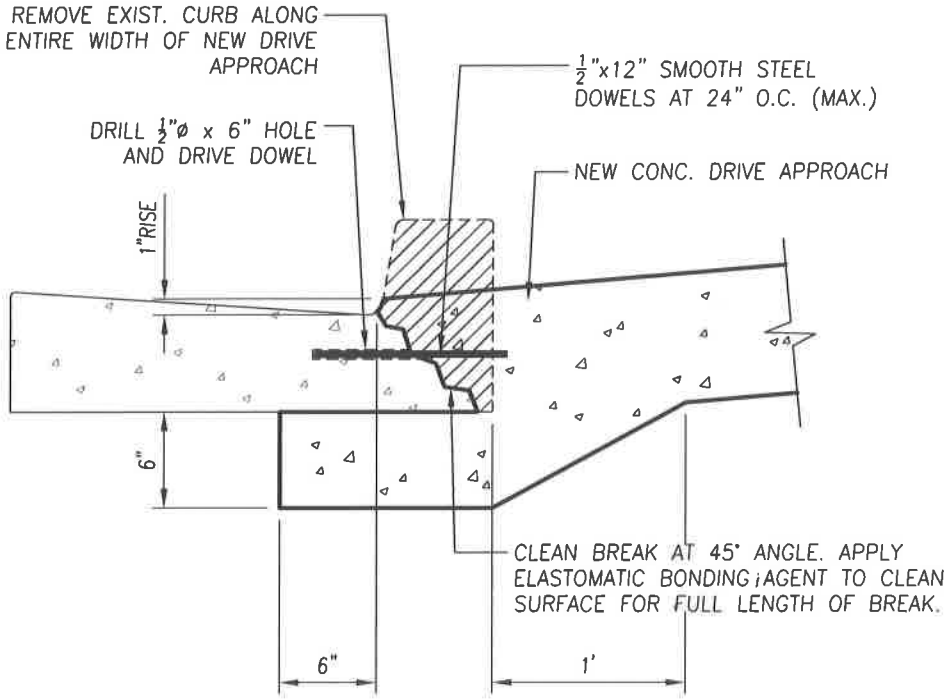

NOTE:
THIS DETAIL REQUIRES PRIOR APPROVAL OF CITY ENGINEER.

REVISIONS	DATE		CITY OF TULARE PUBLIC IMPROVEMENT STANDARD	
			CURB REMOVAL AT NEW DRIVE APPROACH	DRAWING NO.: 4912
			Approved By: Michael W. Miller Date: 11/15/16 City Engineer	1 OF 1

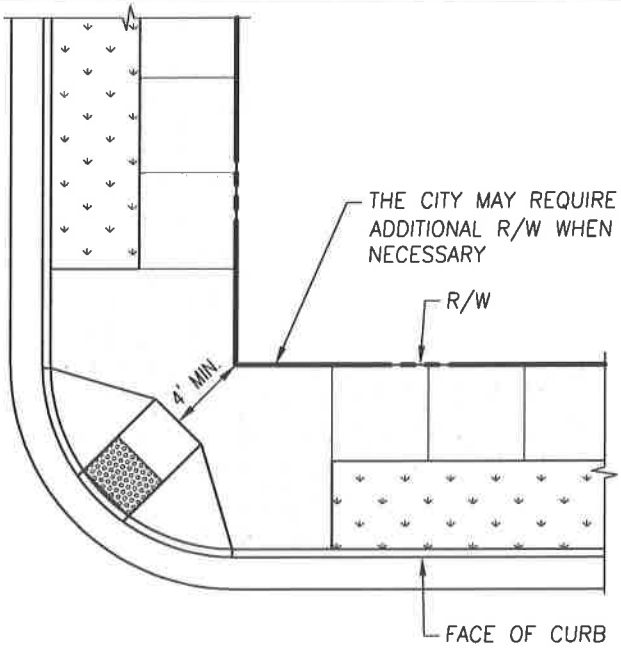

SIDE INTERSECTION FOR CURB RETURNS WITH 8' TO 15' RADIUS

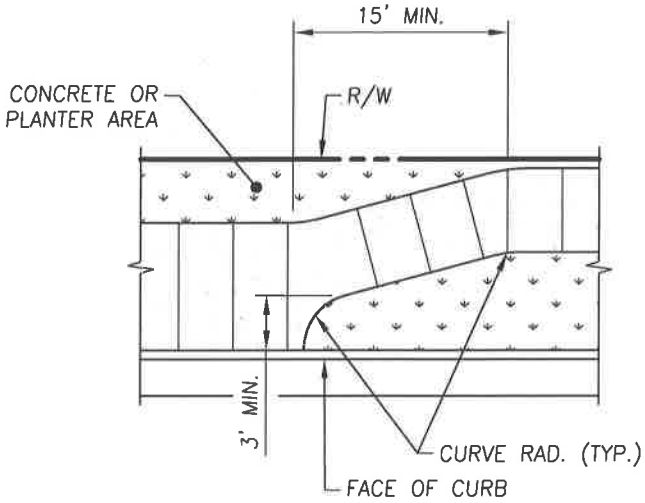

COMMERCIAL TO RESIDENTIAL SIDEWALK TRANSITION

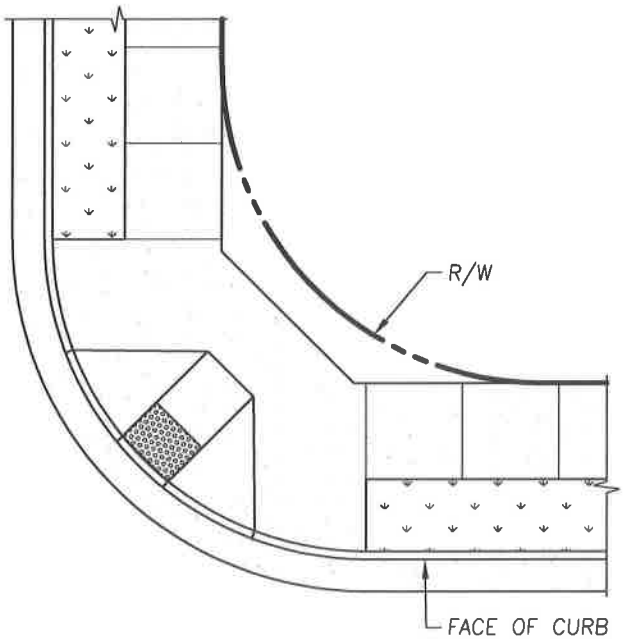

SIDEWALK INTERSECTION FOR CURB RETURNS WITH 16' TO 30' RADIUS

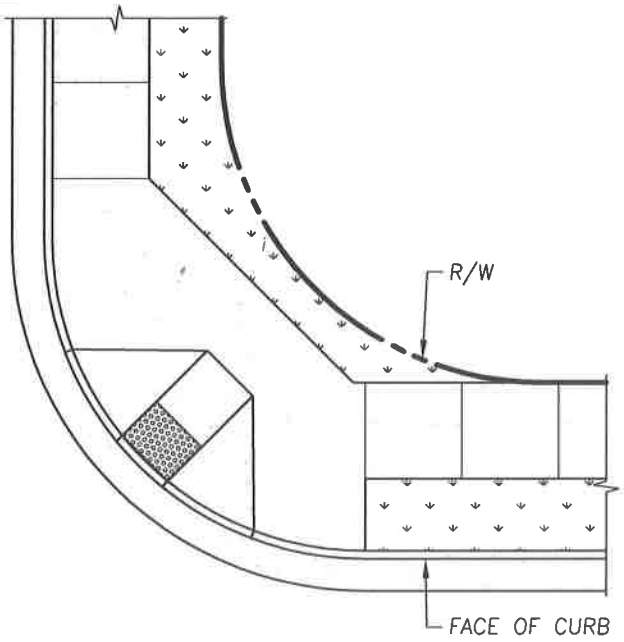

INTERSECTION SIDEWALK TRANSITION

NOTES:

1. SEE DRAWING NO.S 4110-4170 FOR ADDITIONAL INFORMATION REGARDING CURB CUT RAMPS.
2. THE DESIGN ENGINEER SHALL SPECIFY APPLICABLE CURVE RADII ON THE PLANS.

REVISIONS	DATE

CITY OF TULARE
PUBLIC IMPROVEMENT STANDARD

SIDEWALK TRANSITIONS AND INTERSECTIONS

DRAWING NO.: 4913

Approved By: Michael W. Miller
Date: 11/15/16 City Engineer

1 OF 1

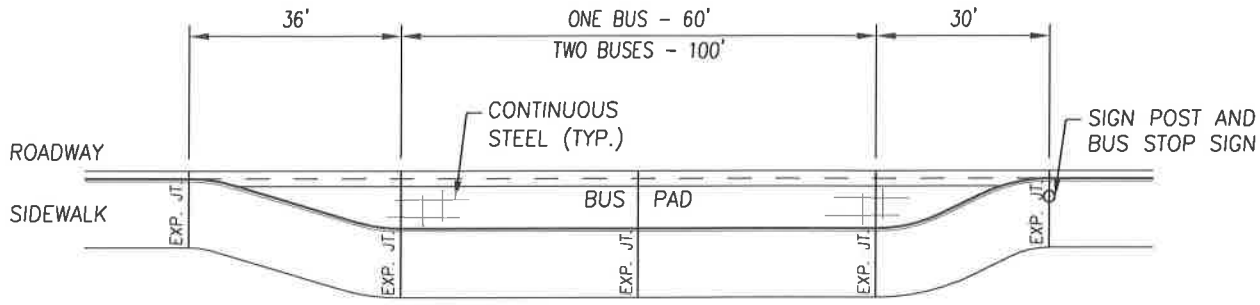

STANDARD BUS TURNOUT

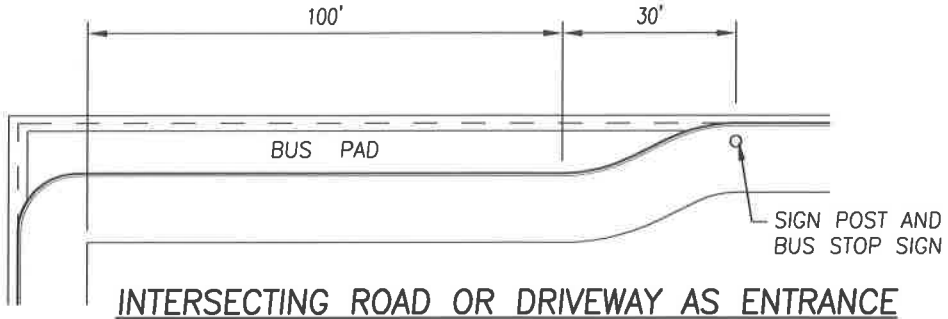

INTERSECTING ROAD OR DRIVEWAY AS ENTRANCE

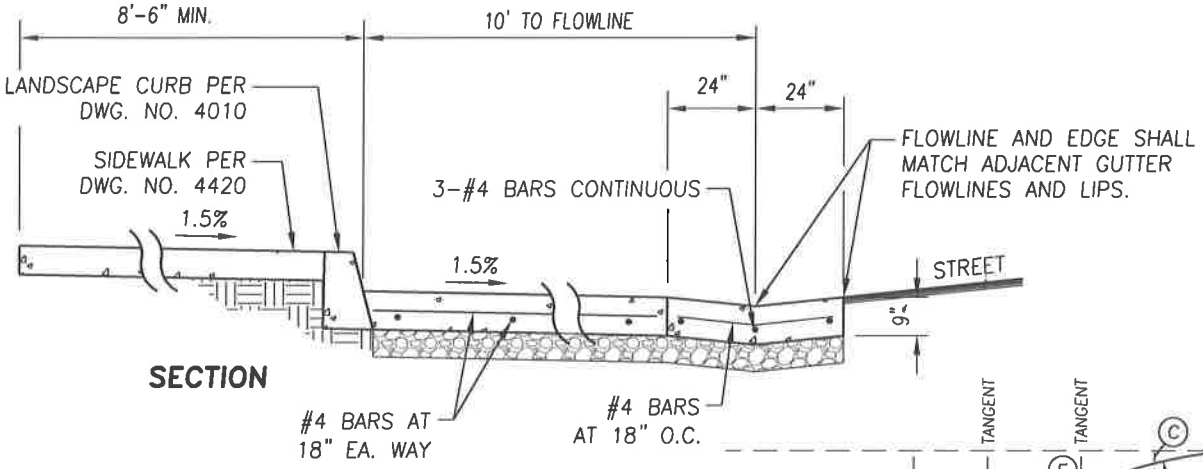

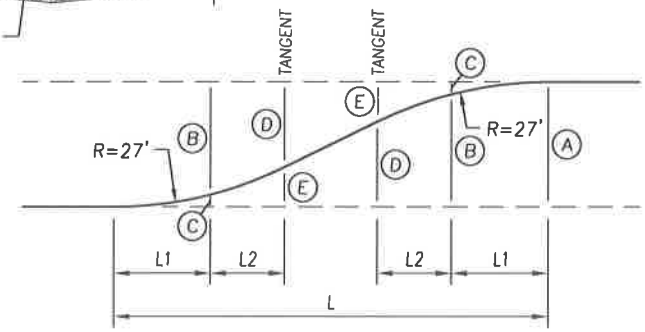

NOTES:

1. BUS PAD AND VEE-GUTTER SHALL BE 9" THICK CLASS 2 CONCRETE OVER 4" CLASS 2 AGGREGATE BASE OVER MIN. 6" COMPACTED SUBGRADE (95% REL. COMPACTION). REINFORCE AS SHOWN.
2. SEE DRAWING NO.S 4010 & 4420 FOR CURB, GUTTER AND SIDEWALK.
3. SEE DRAWING NO. 4910 FOR SAWCUTTING EXISTING PCC.
4. SEE DRAWING NO. 7225 FOR SIGN POST.
5. SCORE AT 10' INTERVALS.

L	L1	L2	A	B	C	D	E
36	4.25	4.00	8.50	8.20	0.30	7.30	1.20
30	6.33	5.87	8.50	7.80	0.70	5.65	2.85

REVERSE TAPER – GEOMETRICS

REVISIONS	DATE

CITY OF TULARE
PUBLIC IMPROVEMENT STANDARD

BUS TURNOUT

DRAWING NO.: 4920

Approved By: Michael W. Miller
Date: 11/15/16 City Engineer