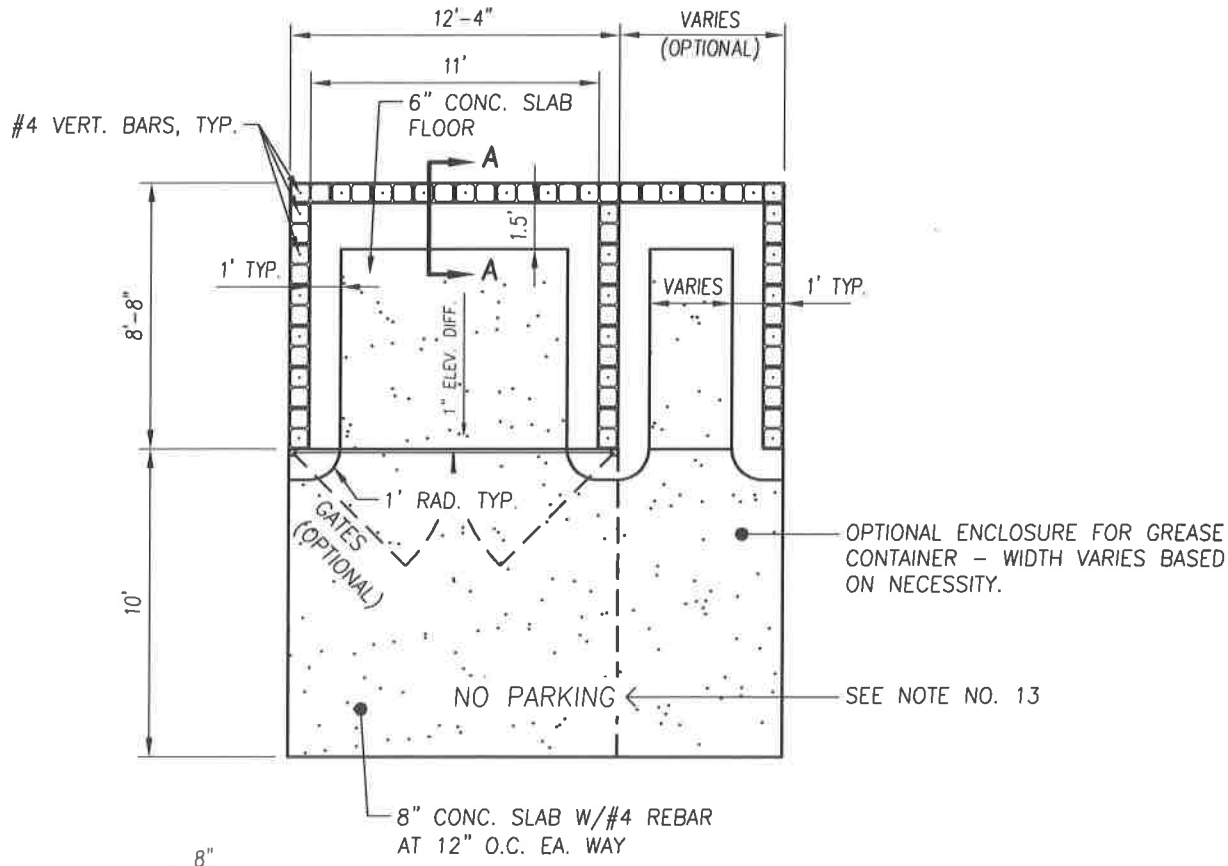


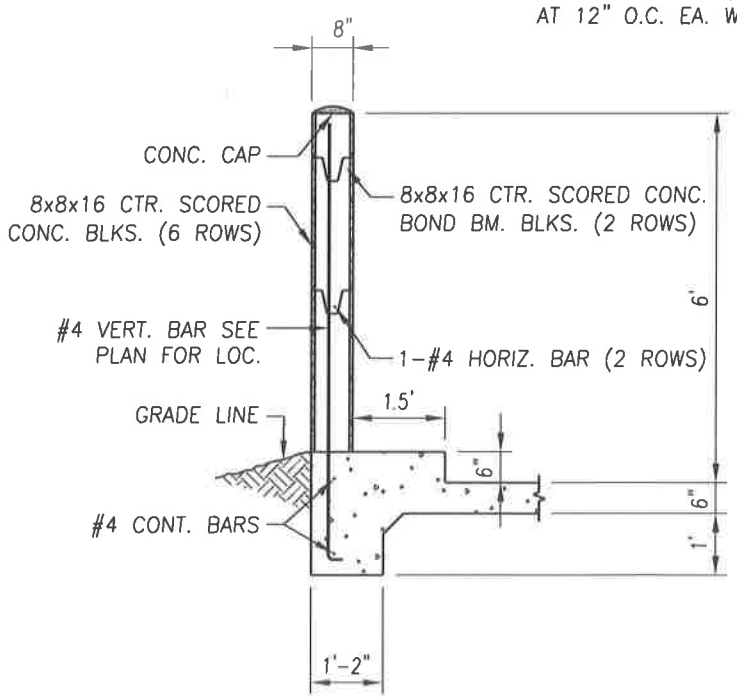


## SECTION A–A

**NOTES:**

1. ALL CELLS IN CONC. BLOCKS SHALL BE FILLED SOLID WITH COARSE GROUT.
2. CORNER BLOCK ENDS AND CENTER WEB SHALL BE CUT TO FORM CONCRETE BOND BEAM.
3. ALL HORIZONTAL AND VERTICAL JOINTS SHALL BE RAKED TO MATCH CENTER SCORED BLOCK.
4. CONC. BLOCK, MORTAR AND COARSE GROUT SHALL CONFORM WITH CBC, LATEST EDITION. SEE DWG. NO. 9120 FOR CONCRETE AND MASONRY MATERIAL REQUIREMENTS.
5. SLAB FLOOR & FOOTING SHALL BE CLASS "B" PORTLAND CEMENT CONCRETE.
6. GROUND TO BE SLOPED 1% AWAY FROM WALLS.
7. LOCATION OF TRASH ENCLOSURE TO BE APPROVED BY THE SOLID WASTE DEPT. OF THE CITY OF TULARE.
8. THIS ENCLOSURE IS FOR STORAGE OF CITY OF TULARE SOLID WASTE CONTAINERS ONLY. IF STORAGE OF GREASE CONTAINERS IS NEEDED, ADD SEPARATE OPTIONAL ENCLOSURE.
9. HINGES SHALL BE ATTACHED TO THE FRONT AND OUTSIDE OF ENCLOSURE WALL, AND OUTSIDE OF CENTER POST.
10. GATES SHALL BE METAL WITH SELF-CLOSING HINGES AND CANE BOLTS/SLEEVES IN OPEN AND CLOSED POSITIONS.
11. HUNG GATES SHALL SWING OPEN TO 180 DEGREES FROM THE CLOSED POSITION AND HAVE A 4" CLEARANCE ABOVE FINISHED PAD OR APRON.
12. ENCLOSURE IS SUBJECT TO FINAL INSPECTION BY THE CITY OF TULARE SOLID WASTE DIVISION AND IS SUBJECT TO RECONSTRUCTION AT OWNER'S EXPENSE IF STANDARDS ARE NOT MET.
13. "NO PARKING" SHALL BE PAINTED AT THE END OF THE CONCRETE APRON IN 12" TALL, RED LETTERING.

| REVISIONS | DATE |
|---|---|
| | |
| | |
| | |
| | |
| | |

CITY OF TULARE INCORPORATED APRIL 5, 1888

# CITY OF TULARE
PUBLIC IMPROVEMENT STANDARD

SINGLE WIDE TRASH ENCLOSURE

DRAWING NO.: 9010

Approved By: Michael W. Miller
Date: 11/15/16 City Engineer

1 OF

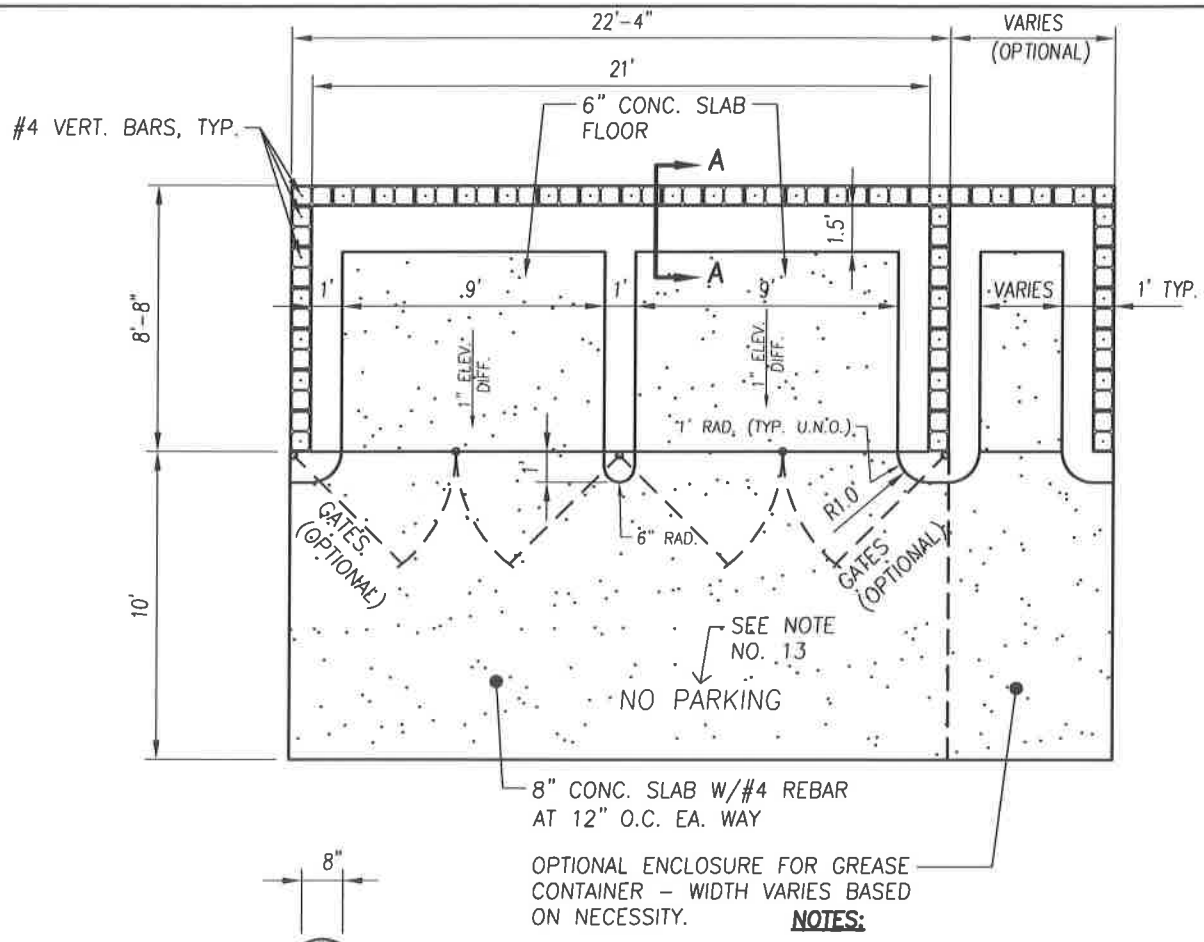


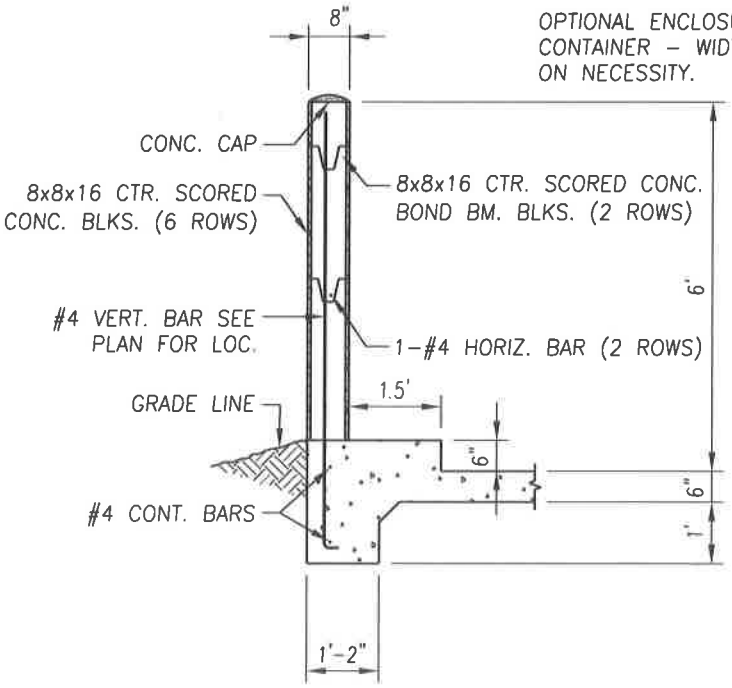


## SECTION A-A

**NOTES:**

1. ALL CELLS IN CONC. BLOCKS SHALL BE FILLED SOLID WITH COARSE GROUT.
2. CORNER BLOCK ENDS AND CENTER WEB SHALL BE CUT TO FORM CONCRETE BOND BEAM.
3. ALL HORIZONTAL AND VERTICAL JOINTS SHALL BE RAKED TO MATCH CENTER SCORED BLOCK.
4. CONC. BLOCK, MORTAR AND COARSE GROUT SHALL CONFORM WITH CBC, LATEST EDITION. SEE DWG. NO. 9120 FOR CONCRETE AND MASONRY MATERIAL REQUIREMENTS.
5. SLAB FLOOR & FOOTING SHALL BE CLASS "B" PORTLAND CEMENT CONCRETE.
6. GROUND TO BE SLOPED 1% AWAY FROM WALLS.
7. LOCATION OF TRASH ENCLOSURE TO BE APPROVED BY THE SOLID WASTE DEPT. OF THE CITY OF TULARE.
8. THIS ENCLOSURE IS FOR STORAGE OF CITY OF TULARE SOLID WASTE CONTAINERS ONLY. IF STORAGE OF GREASE CONTAINERS IS NEEDED, ADD SEPARATE OPTIONAL ENCLOSURE.
9. HINGES SHALL BE ATTACHED TO THE FRONT AND OUTSIDE OF ENCLOSURE WALL, AND OUTSIDE OF CENTER POST.
10. GATES SHALL BE METAL WITH SELF-CLOSING HINGES AND CANE BOLTS/SLEEVES IN OPEN AND CLOSED POSITIONS.
11. HUNG GATES SHALL SWING OPEN TO 180 DEGREES FROM THE CLOSED POSITION AND HAVE A 4" CLEARANCE ABOVE FINISHED PAD OR APRON.
12. ENCLOSURE IS SUBJECT TO FINAL INSPECTION BY THE CITY OF TULARE SOLID WASTE DIVISION AND IS SUBJECT TO RECONSTRUCTION AT OWNER'S EXPENSE IF STANDARDS ARE NOT MET.
13. "NO PARKING" SHALL BE PAINTED AT THE END OF THE CONCRETE APRON IN 12" TALL, RED LETTERING.

| REVISIONS | DATE |
|---|---|
| | |
| | |
| | |
| | |
| | |

CITY OF TULARE ® INCORPORATED APRIL 5, 1888 ®

# CITY OF TULARE
PUBLIC IMPROVEMENT STANDARD

DOUBLE WIDE TRASH ENCLOSURE

DRAWING NO.: 9015

Approved By: Michael W. Miller
Date: 11/15/16 City Engineer

1 OF

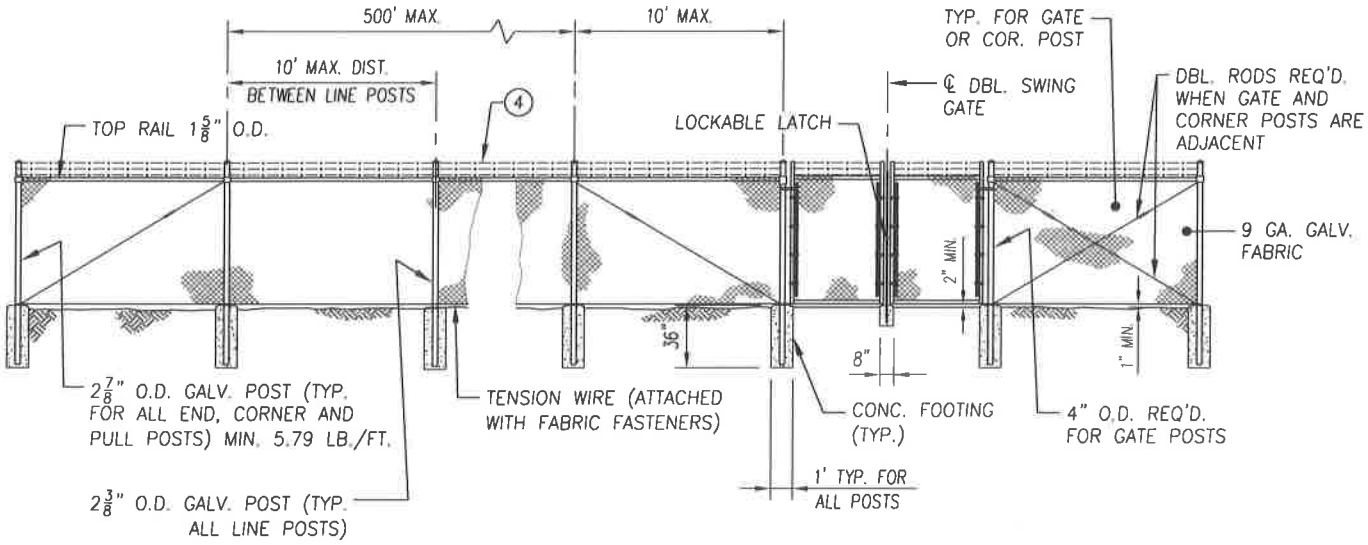


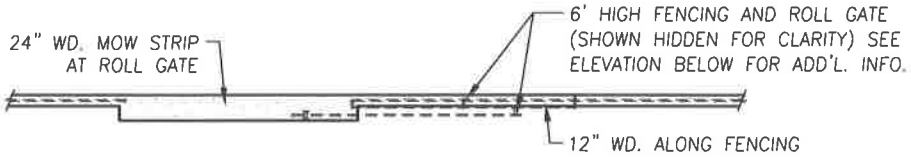


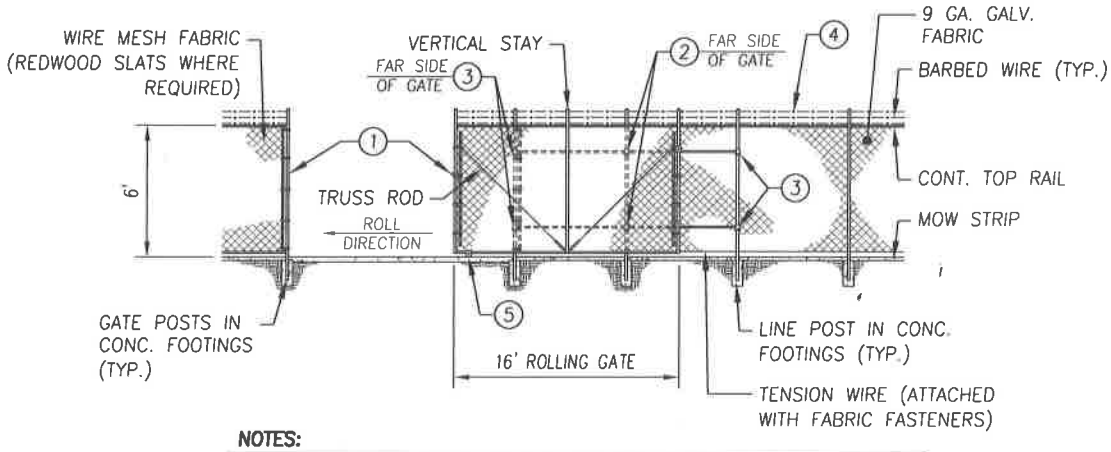


**NOTES:**

1. GATE FRAME AND ROLLING GATE PIPE TRACK SHALL BE $1\frac{7}{8}$" PIPE.
2. VERTICAL STAY SHALL BE $1\frac{5}{8}$" PIPE.
3. USE $\frac{3}{8}$" STEEL TRUSS RODS WITH TURN BUCKLES.
4. THE CITY ENGINEER MAY REQUIRED BARBED WIRE.
5. REFER TO CITY OF TULARE TECHNICAL SPECIFICATIONS.

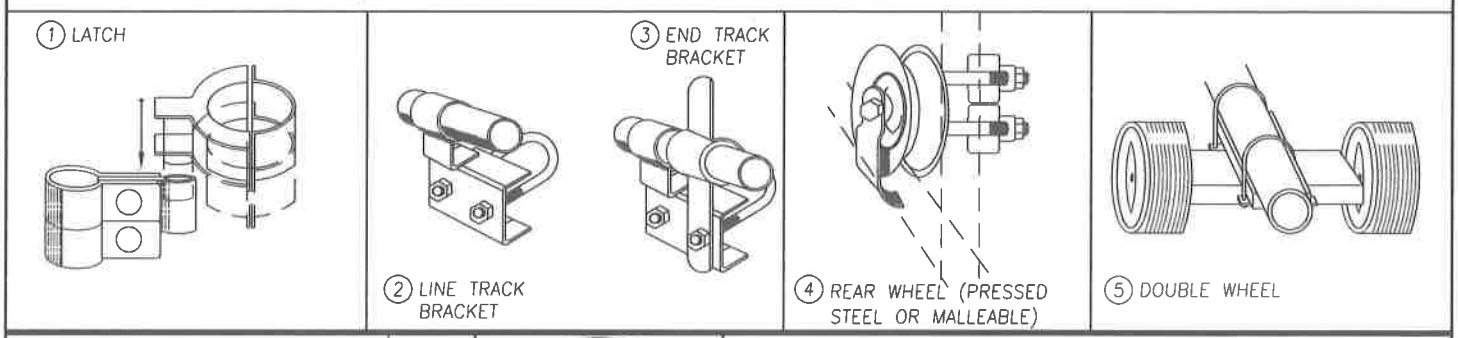


| REVISIONS | DATE |
|---|---|
| | |
| | |
| | |
| | |
| | |

CITY OF TULARE INCORPORATED APRIL 5, 1888

# CITY OF TULARE
PUBLIC IMPROVEMENT STANDARD

## CHAINLINK FENCE AND GATES

DRAWING NO.: 9110

Approved By: Michael W. Miller
Date: 11/15/16 City Engineer

1 OF 1

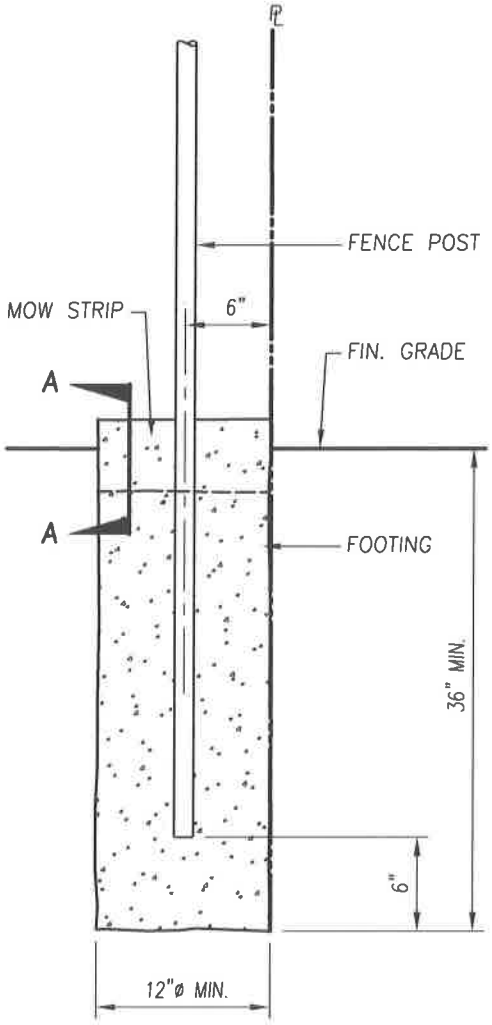


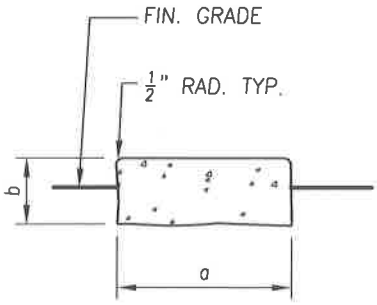


SECTION A–A
MOW STRIP DETAIL

MOW STRIP DIMENSIONS (INCHES)

| LOCATION | a | b |
|---|---|---|
| ROLLING GATES | 24 | 8 |
| SWING TRAFFIC GATES | 12 | 8 |
| OTHER | 12 | 6 |

| REVISIONS | DATE |
|---|---|
| | |
| | |
| | |
| | |
| | |

CITY OF TULARE
PUBLIC IMPROVEMENT STANDARD

FENCE FOOTING AND MOW STRIP

DRAWING NO.: 9115

Approved By: Michael W. Miller
Date: 11/15/16 City Engineer

1 OF 1

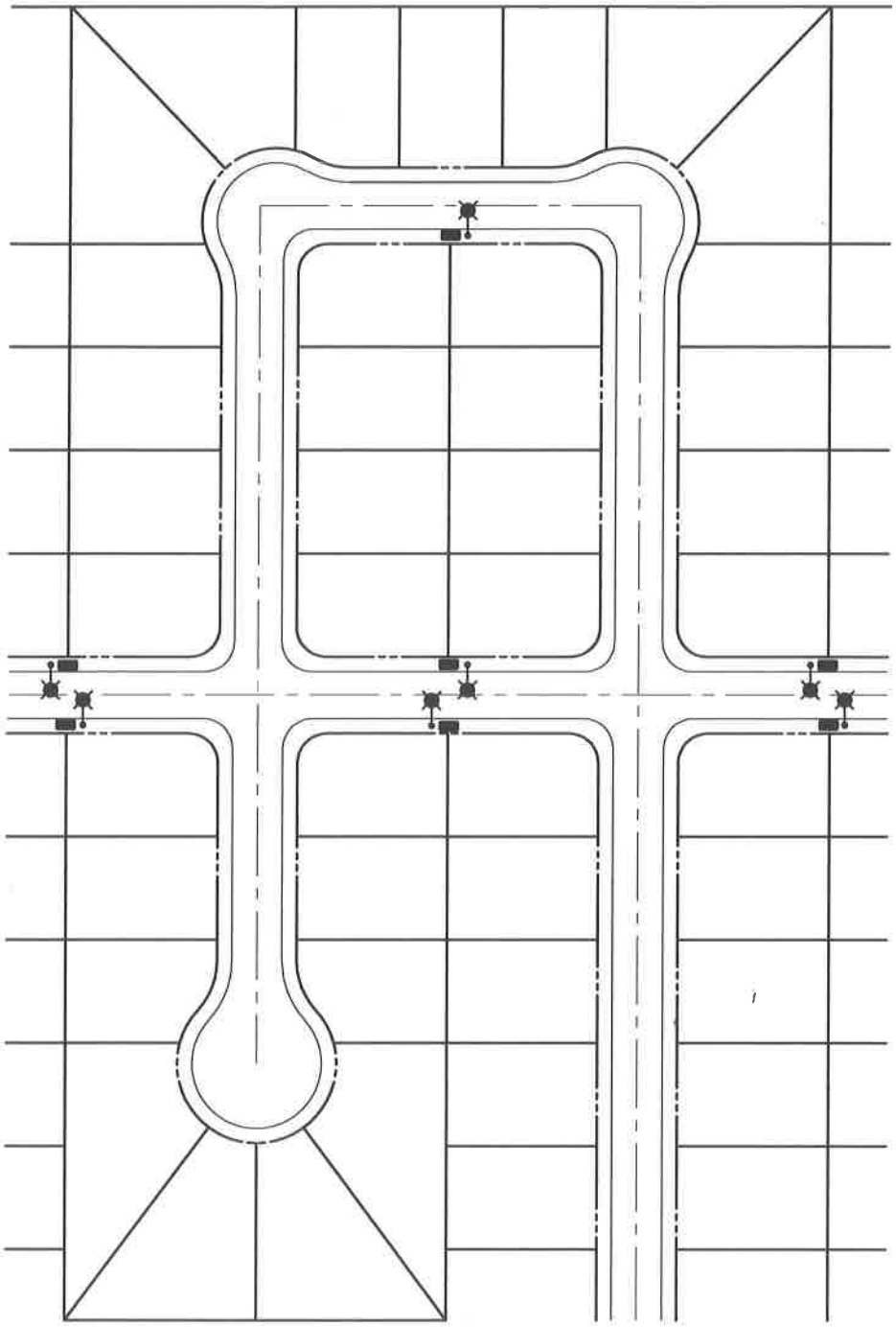

TYPICAL MAILBOX CLUSTER LOCATION

**NOTES:**

1. MAILBOX CLUSTER LOCATIONS SHALL HAVE A STREET LIGHT LOCATED WITHIN TEN FEET OF THE CLUSTER CONCRETE PAD.

2. ALL MAILBOX CLUSTER LOCATIONS SHALL BE APPROVED BY THE UNITED STATES POSTAL SERVICE PRIOR TO INSTALLATION.

| REVISIONS | DATE | | CITY OF TULARE<br>PUBLIC IMPROVEMENT STANDARD | |
|---|---|---|---|---|
| | | | MAILBOX CLUSTER LOCATIONS | DRAWING NO.: |
| | | | Approved By: Michael W. Miller<br>Date: 11/15/16 City Engineer | 9210<br>1 OF 1 |

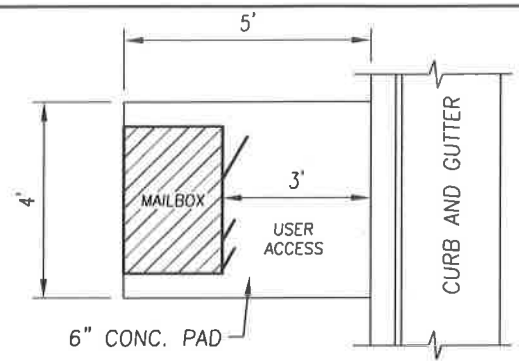


## PLAN – WITHOUT SIDEWALK

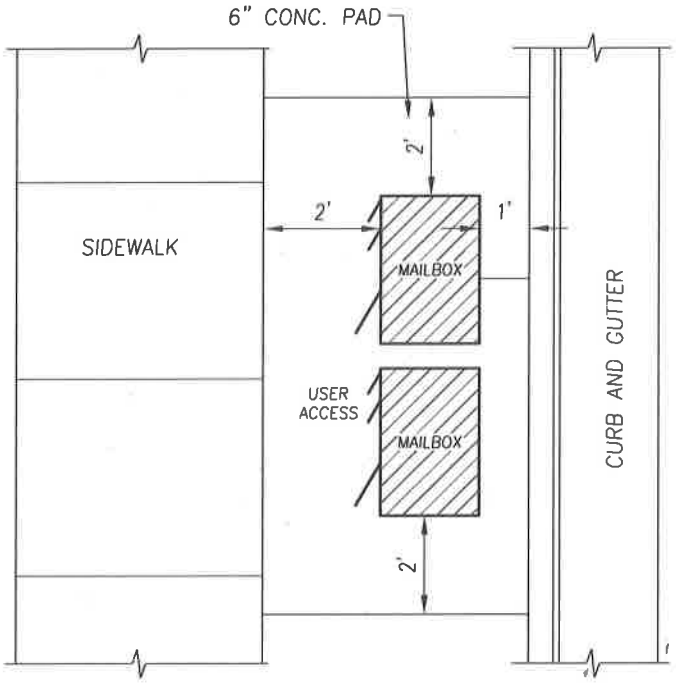


## PLAN – WITH SIDEWALK

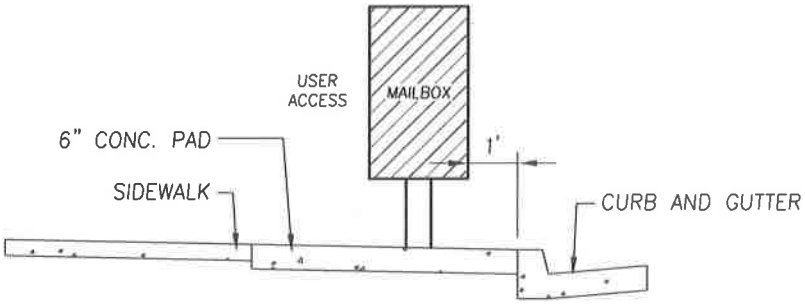


## SECTION – WITH SIDEWALK

**NOTES:**

1. ALL MAILBOX CLUSTER DESIGNS SHALL BE APPROVED BY THE UNITED STATES POSTAL SERVICE PRIOR TO INSTALLATION.
2. ALL MAILBOX CONCRETE PADS SHALL HAVE 4"x6" WELDED WIRE MESH REINFORCEMENT.

| REVISIONS | DATE | | CITY OF TULARE<br>PUBLIC IMPROVEMENT STANDARD | |
|---|---|---|---|---|
| | | CITY OF TULARE INCORPORATED APRIL 5, 1888 | MAILBOX CLUSTER DETAIL | DRAWING NO.: |
| | | | Approved By: Michael W. Miller<br>Date: 11/15/16 City Engineer | 9215<br>1 OF 1 |

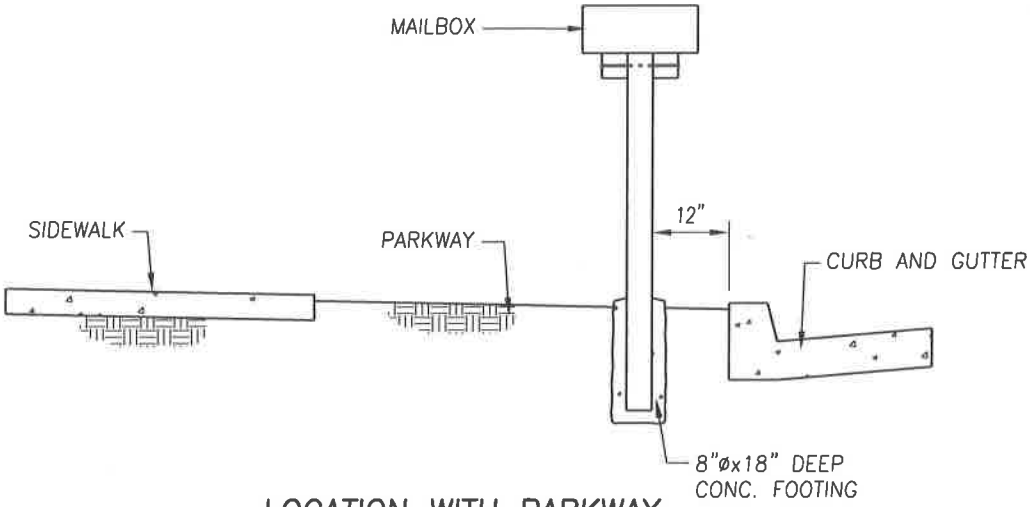


LOCATION WITH PARKWAY

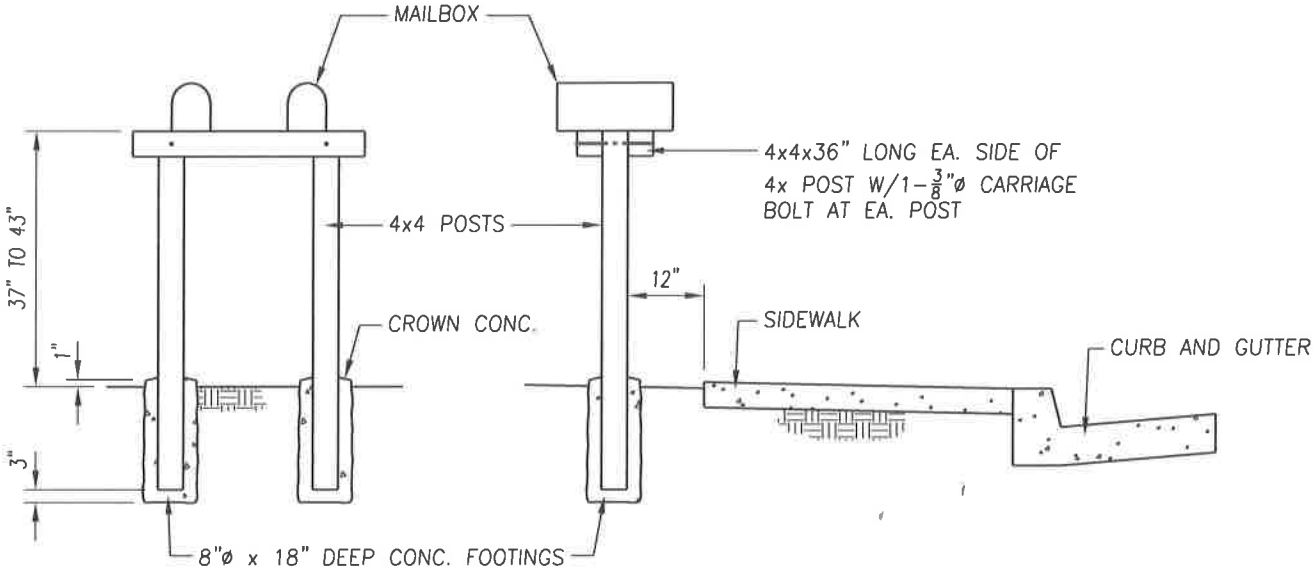


FRONT VIEW

LOCATION WITH ADJACENT SIDEWALK

**NOTES:**

1. MAILBOXES SHALL BE IN COLLECTIONS OF 2 MINIMUM TO 3 MAXIMUM.
2. MAILBOXES SHALL SERVE HOUSES ON ONE SIDE OF STREET ONLY.
3. HOMEOWNERS SHALL BE RESPONSIBLE FOR ALL MAINTENANCE AND REPAIR.
4. VERTICAL STACKING OF MAILBOXES IS NOT PERMITTED
5. ALL WOOD POSTS SHALL BE NO. 2 PRESSURE TREATED DOUGLAS FIR OR REDWOOD.

| REVISIONS | DATE | | CITY OF TULARE<br>PUBLIC IMPROVEMENT STANDARD | |
|---|---|---|---|---|
| | | CITY OF TULARE INCORPORATED APRIL 5, 1888 | MAILBOX - INFILL AND REPLACEMENT ONLY | DRAWING NO.:<br>9220 |
| | | | Approved By: Michael W. Miller<br>Date: 11/15/16 City Engineer | 1 OF 1 |

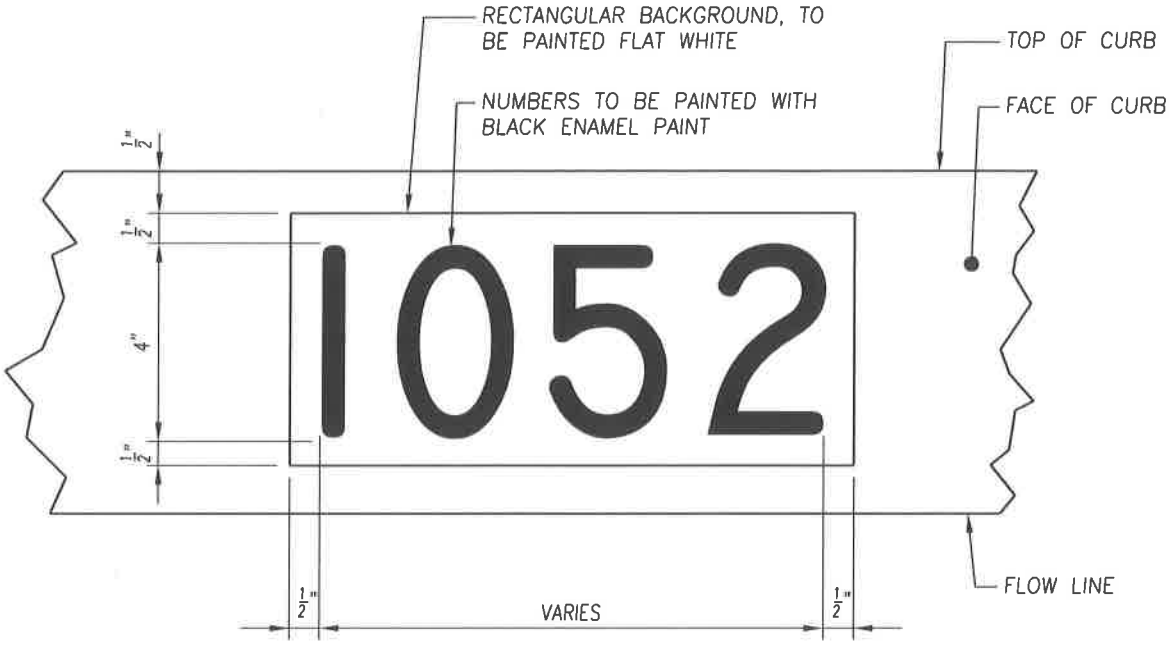


**NOTES:**

1. HOUSE NUMBERS TO BE PAINTED NEAR THE DRIVEWAY APPROACH ON THE SIDE THAT IS CLOSEST TO THE CENTER OF THE LOT. STENCILS MUST BE APPROVED BY THE CITY ENGINEER.

2. REQUIRES NOTARIZED HOLD HARMLESS AGREEMENT FROM APPLICANT AND AN ENCROACHMENT PERMIT FROM THE ENGINEERING DEPARTMENT TO APPLICANT OBTAINING A CITY BUSINESS LICENSE THROUGH CITY FINANCE DEPARTMENT.

3. RESIDENTS CANNOT BE REQUIRED TO PAY FOR THIS SERVICE, EXCEPT BY WRITTEN AGREEMENT WITH THE RESIDENT WHICH IS ENTERED INTO PRIOR TO PAINTING.

| REVISIONS | DATE | | CITY OF TULARE<br>PUBLIC IMPROVEMENT STANDARD | |
|---|---|---|---|---|
| | | | HOUSE NUMBER ON CURB | DRAWING NO.: |
| | | | Approved By: Michael W. Miller<br>Date: 11/15/16 City Engineer | 9225<br>1 OF 1 |

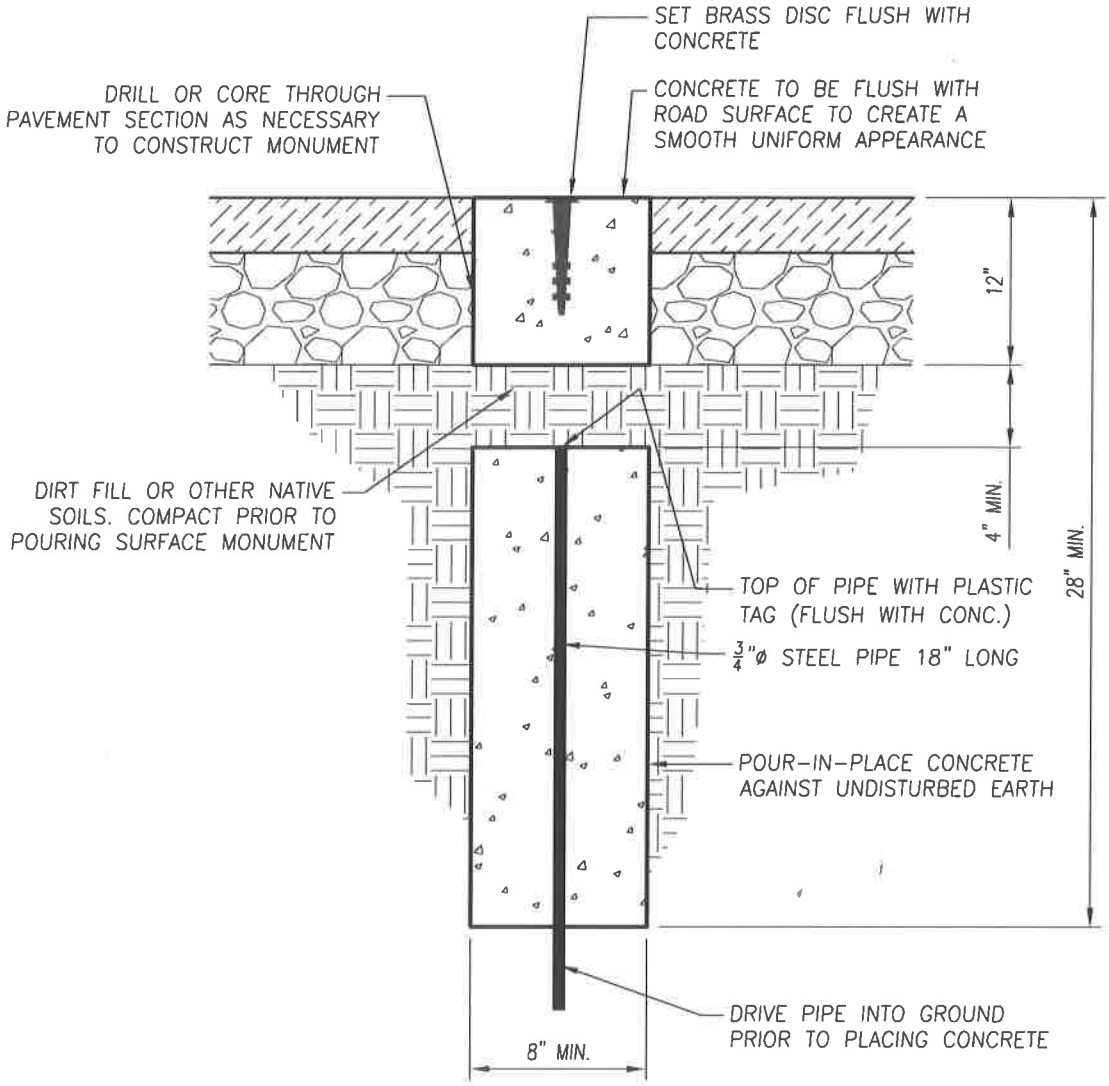


**NOTES:**

1. SURFACE MONUMENTS SHALL BE PLACED AT LOCATIONS IN THE PUBLIC STREET PER THE DIRECTION OF THE CITY ENGINEER
2. PLASTIC TAG ON REBAR SHALL BE MARKED WITH THE SURVEYOR'S LICENSE NUMBER RESPONSIBLE FOR SETTING THE MONUMENT.
3. MONUMENT SHALL BE 2" DIAMETER FLAT BRASS, WITH CORRUGATED STEM, BY "SURV-KAP" OR EQUAL.
4. THE BRASS DISC SHALL BE STAMPED WITH THE SURVEYOR'S LICENSE NUMBER, WHO IS RESPONSIBLE FOR SETTING THE MONUMENT.
5. BRASS DISC SHALL BE CENTER-PUNCHED BY SURVEYOR UPON COMPLETION OF MONUMENT CONSTRUCTION.

| REVISIONS | DATE | | CITY OF TULARE<br>PUBLIC IMPROVEMENT STANDARD | |
|---|---|---|---|---|
| | | CITY OF TULARE INCORPORATED APRIL 5, 1888 | SURFACE SURVEY MARKER | DRAWING NO.: |
| | | | Approved By: Michael W. Miller<br>Date: 11/15/16 City Engineer | 9310<br>1 OF 1 |

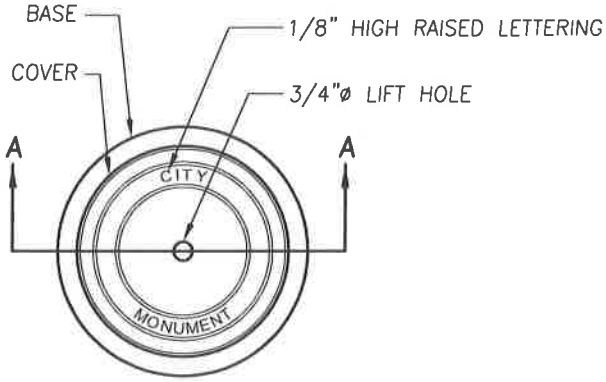


## CAST IRON BASE & COVER

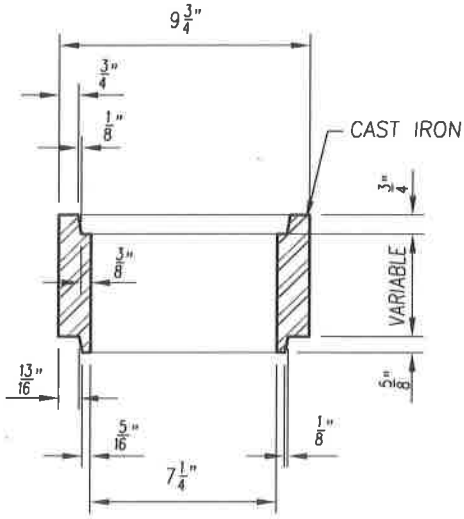


## EXTENSION RING SECTION

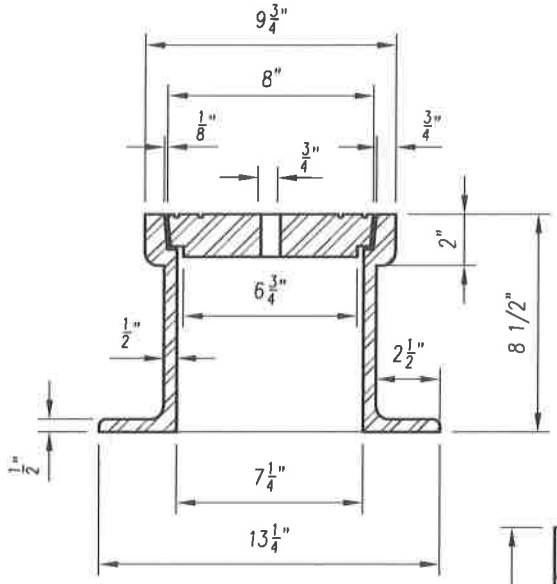


## SECTION A–A

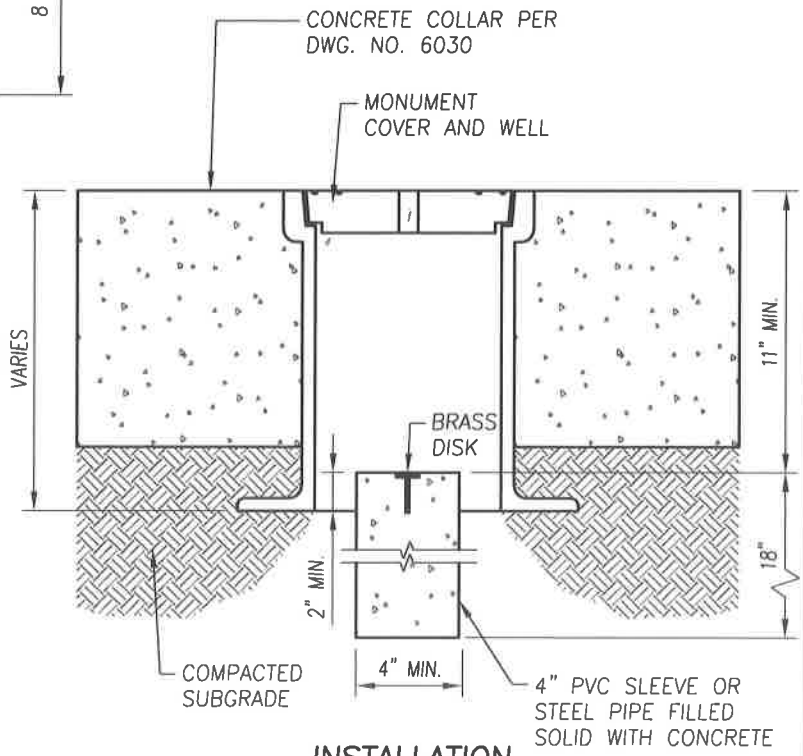


## INSTALLATION METHOD

**NOTES:**

1. BASES, COVERS, & EXTENSIONS TO BE ATLAS FOUNDRY & MFG. CO., RICHMOND, CA.; PINKERTON FOUNDRY, LODI, CA.; OR EQUAL
2. MONUMENT WELLS SHALL BE USED AT SECTION CORNERS, AS DIRECTED BY THE CITY ENGINEER.
3. SEE DWG. NO. 9310 FOR BRASS DISC INFORMATION.

| REVISIONS | DATE | | CITY OF TULARE<br>PUBLIC IMPROVEMENT STANDARD | |
|---|---|---|---|---|
| | | CITY OF TULARE INCORPORATED APRIL 5, 1888 | SURVEY MONUMENT & WELL | DRAWING NO.: 9311 |
| | | | Approved By: Michael W. Miller<br>Date: 11/15/16 City Engineer | 1 OF 1 |

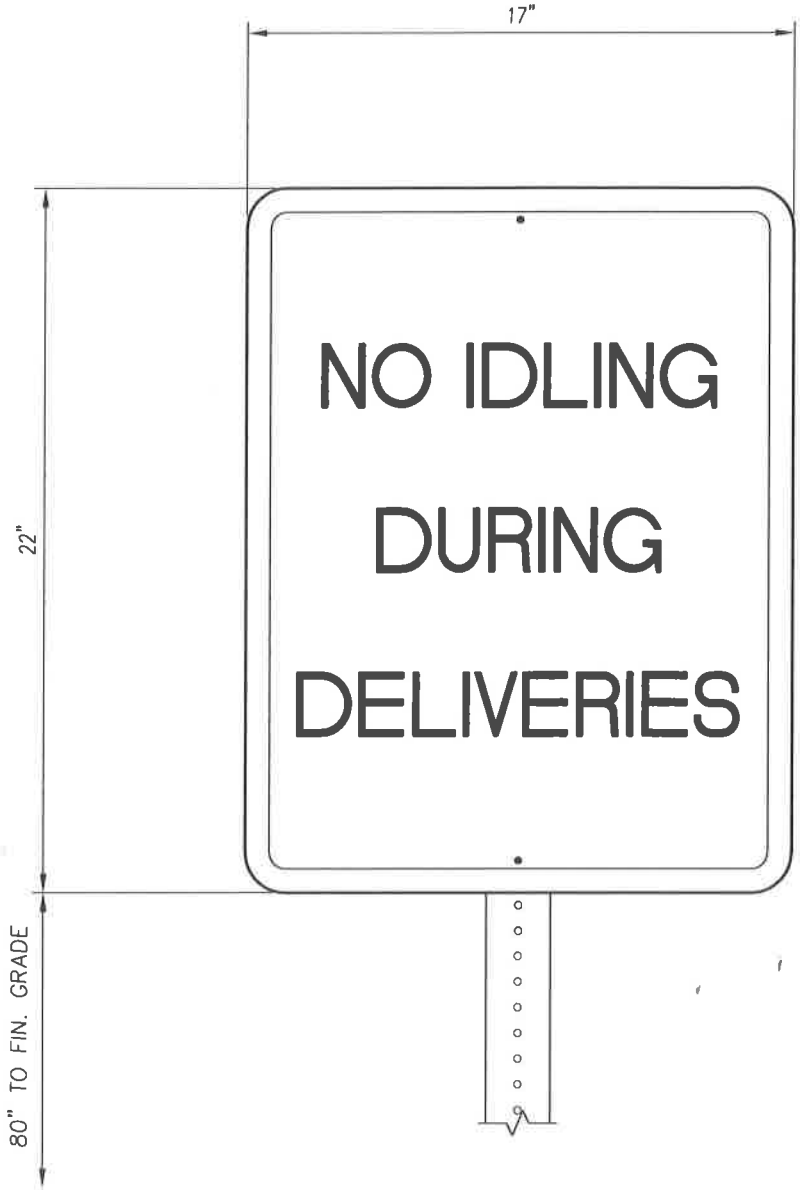


**NOTES:**

1. SIGN SHALL BE PROMINENTLY POSTED AT LOCATION WHERE DELIVERIES ARE RECEIVED.
2. SIGH SHALL HAVE BLACK LETTERING ON A WHITE BACKGROUND.
3. WORDING SHALL BE SIZED TO FIT SIGN.
4. MOUNT SIGN ON BUILDING OR ON POST SIMILAR TO CITY STANDARD DETAIL 7225.

| REVISIONS | DATE | | CITY OF TULARE<br>PUBLIC IMPROVEMENT STANDARD | |
|---|---|---|---|---|
| | | | TRUCK DELIVERY SIGNAGE | DRAWING NO.: |
| | | | Approved By: Michael W. Miller<br>Date: 11/15/16 City Engineer | 9410<br>1 OF 1 |

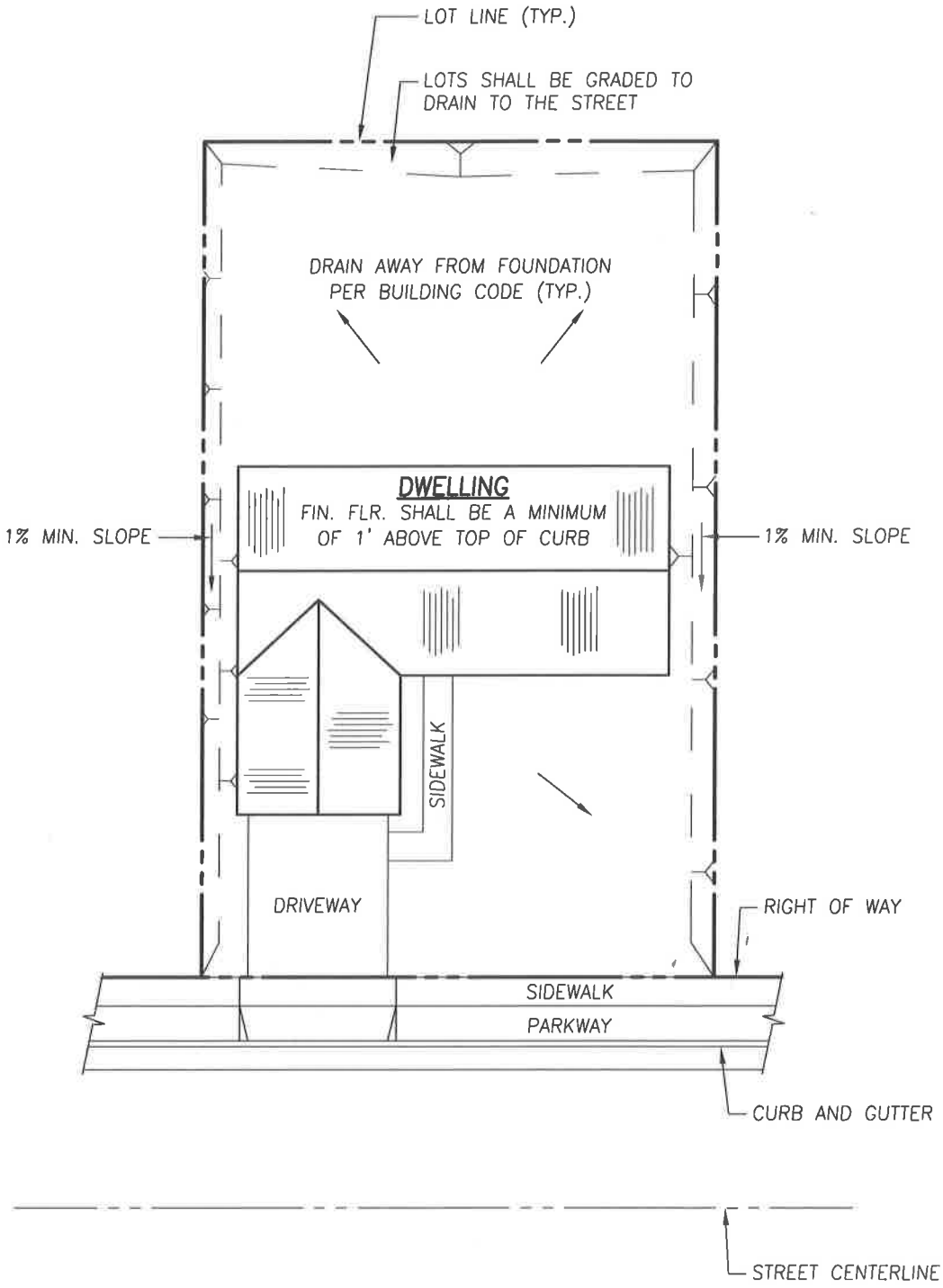


| REVISIONS | DATE |
|---|---|
| | |
| | |
| | |
| | |
| | |

CITY OF TULARE
PUBLIC IMPROVEMENT STANDARD

TYPICAL RESIDENTIAL LOT DRAINAGE

DRAWING NO.: 9510

Approved By: Michael W. Miller
City Engineer

Date: 11/15/16

1 OF 1

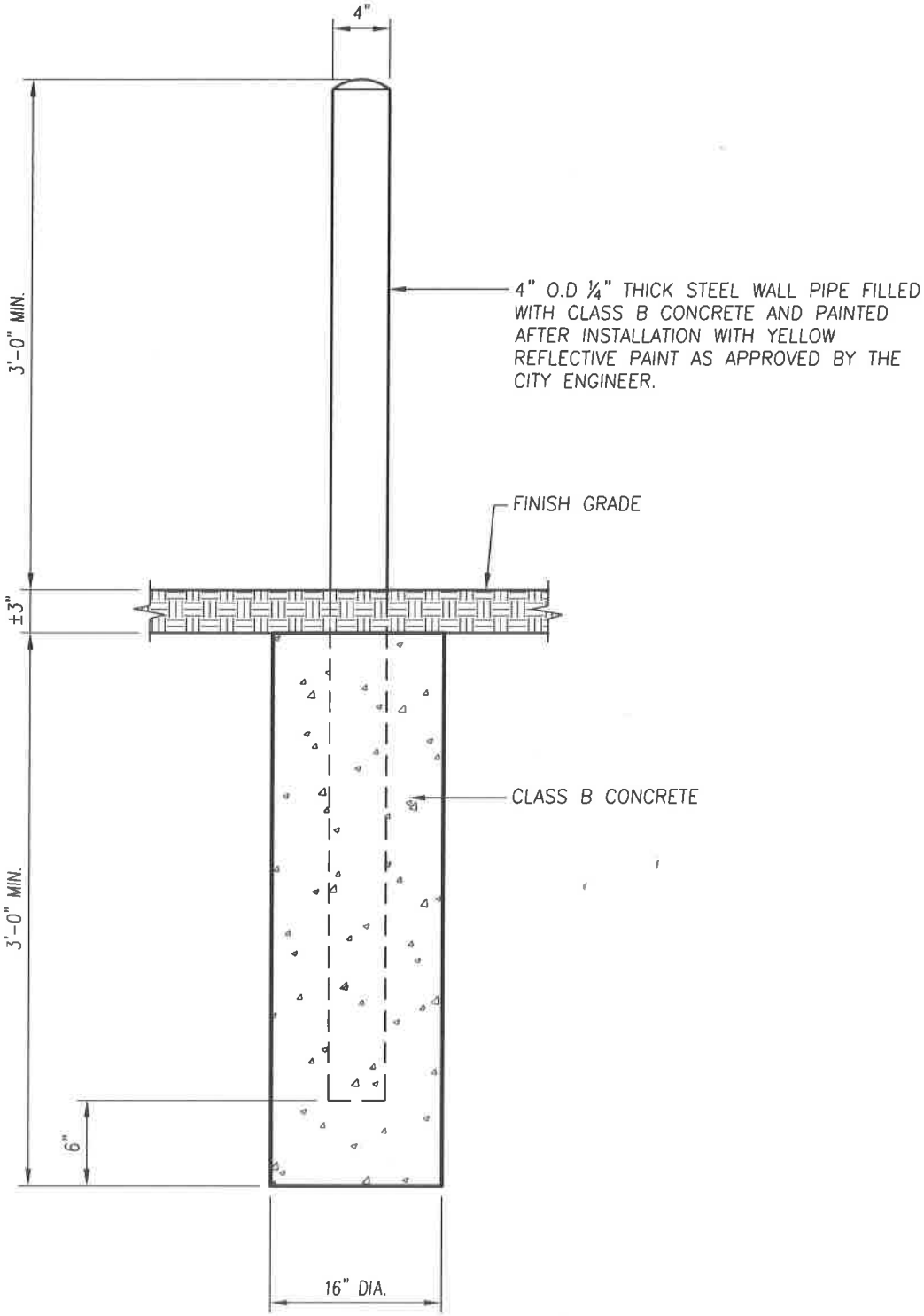


| REVISIONS | DATE | | CITY OF TULARE<br>PUBLIC IMPROVEMENT STANDARD | |
|---|---|---|---|---|
| | | | PIPE BOLLARD | DRAWING NO.: |
| | | | Approved By: Michael W. Miller<br>Date: 11/15/16 City Engineer | 9610<br>1 OF 1 |