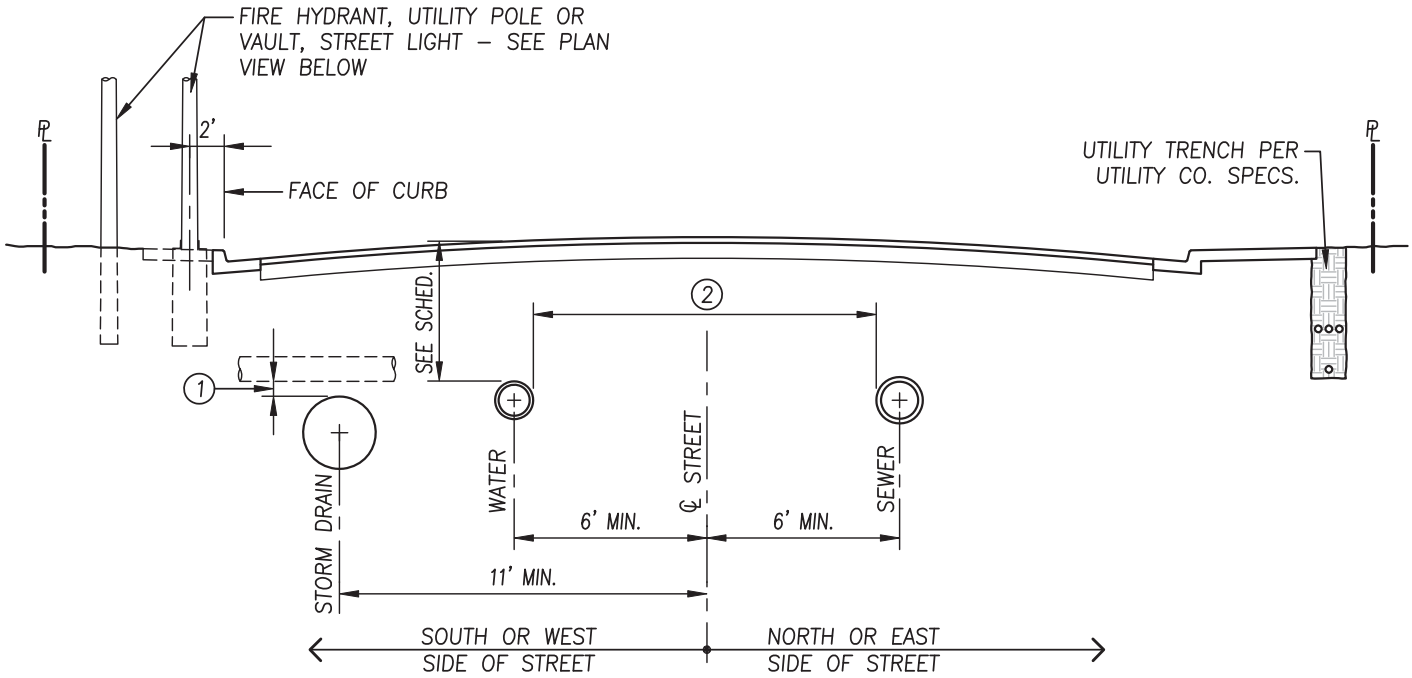

NOTES:

1. MINIMUM VERTICAL SEPARATION AT ALL UTILITY CROSSINGS SHALL BE 6" CLEAR, UNLESS OTHERWISE APPROVED BY THE CITY ENGINEER.
2. SEE DRAWING NO.S 6110 AND 6140.

WATER MAIN – DEPTH SCHEDULE

SIZE OF MAIN (INCHES)	MIN. COVER BELOW FIN. GRADE (FEET)	MIN. COVER BELOW SUBGRADE (FEET)
6	3.5 OR	2.5 (WHICHEVER IS DEEPER)
8	4.0 OR	3.0 (WHICHEVER IS DEEPER)
10	4.0 OR	3.0 (WHICHEVER IS DEEPER)
12	4.0 OR	3.0 (WHICHEVER IS DEEPER)

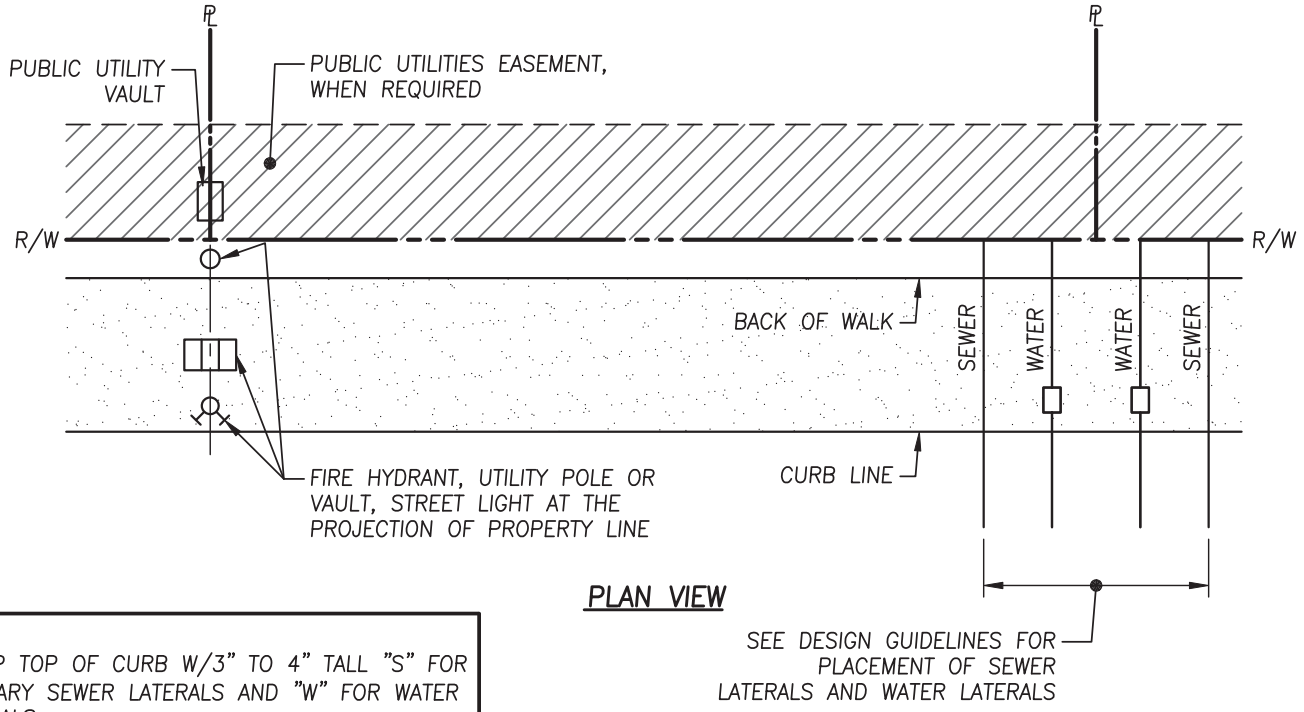

PLAN VIEW

NOTE:
STAMP TOP OF CURB W/3" TO 4" TALL "S" FOR SANITARY SEWER LATERALS AND "W" FOR WATER LATERALS.

REVISIONS	DATE

CITY OF TULARE
PUBLIC IMPROVEMENT STANDARD

UTILITY LOCATIONS

DRAWING NO.: 6010

Approved By:

Date: 1/1/16 City Engineer

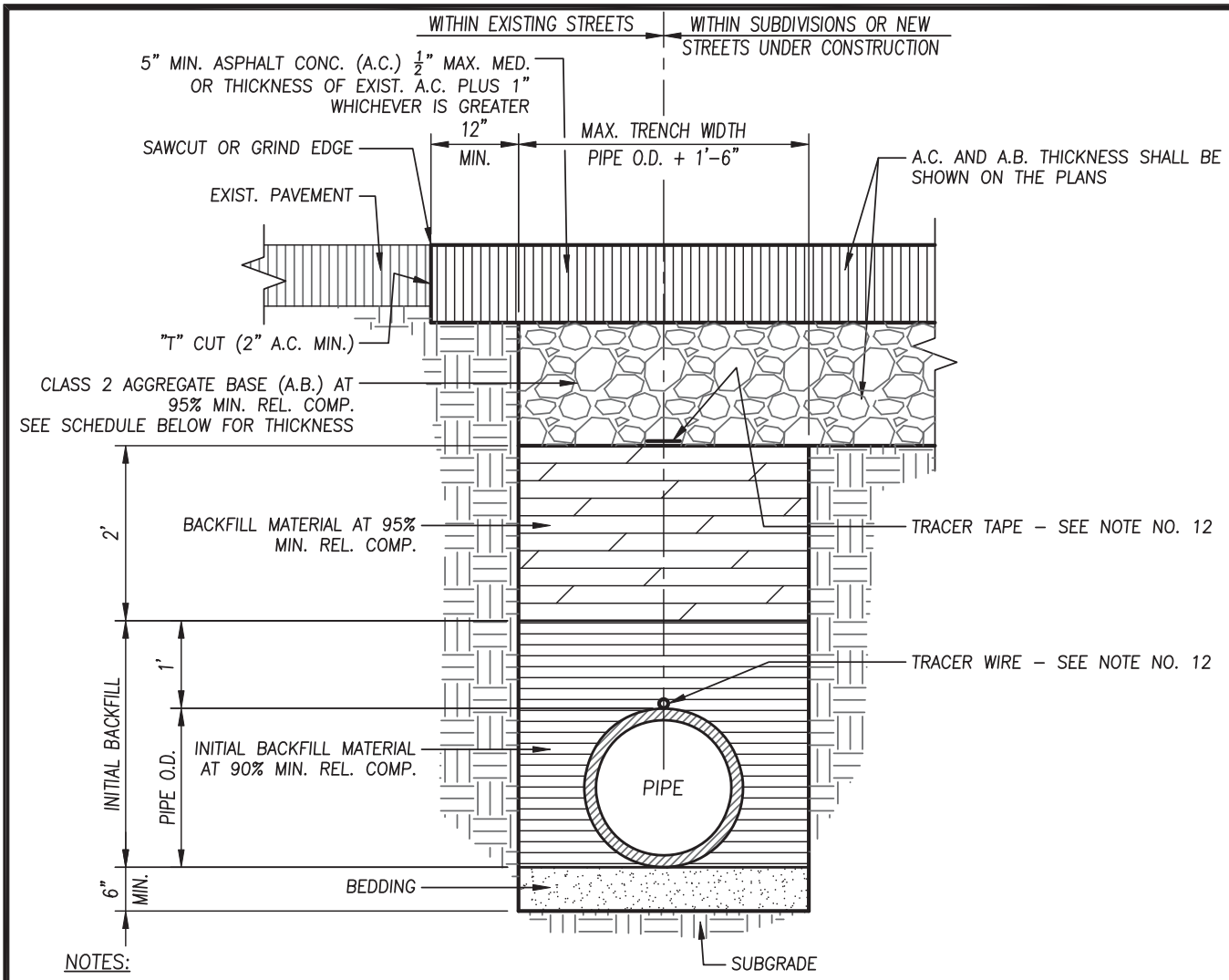

NOTES:

1. PREPARATION OF THE FOUNDATION TO RECEIVE MATERIAL SHALL BE THE RESPONSIBILITY OF THE CONTRACTOR, AND SHALL BE PLACED AS REQUIRED BY THE SOILS REPORT.
2. THE BEDDING AND INITIAL BACKFILL MATERIAL SHALL CONSIST OF A MINIMUM 30% SAND EQUIVALENT.
3. INITIAL BACKFILL FOR AREA AROUND THE PIPE AND 12" ABOVE THE TOP OF THE PIPE SHALL BE HAND-COMPACTED TO 90% MINIMUM RELATIVE COMPACTION.
4. HYDRO-HAMMERS SHALL NOT BE USED.
5. BACKFILL MATERIAL SHALL BE PLACED IN 6" MAX. LIFTS OF PROPERLY MOISTENED AND COMPACTED MATERIAL.
6. EXISTING PAVEMENT SURFACING SHALL BE CUT ("T" CUT) AS SHOWN AFTER TRENCH IS BACKFILLED AND AGGREGATE BASE MATERIAL IS IN PLACE AND COMPACTED AS REQUIRED.
7. ASPHALTIC PAINT BINDER, "TACK COAT", SHALL BE APPLIED TO ALL ADJACENT VERTICAL CONTACT SURFACES OF EXISTING PAVEMENT AND CONCRETE IMMEDIATELY PRIOR TO TRENCH PAVING. THE AREA MUST BE CLEANED BEFORE THE TACK COAT IS APPLIED.
8. AFTER TRENCH PAVING HAS BEEN COMPLETED APPLY A SEAL COAT TO ALL TRENCH EDGES WHICH ABUT EXISTING PAVEMENT AS DIRECTED BY THE PUBLIC WORKS INSPECTOR.
9. IN AREAS OF NO PAVEMENT, OR PHASED SUBDIVISIONS, OR WHERE NO A.C. PAVEMENT AND AGGREGATE BASE IS REQUIRED, THE BACKFILLED MATERIAL SHALL BE COMPACTED TO 92% MINIMUM RELATIVE COMPACTION.
10. PLACE AND MAINTAIN 2" MIN. TEMPORARY A.C. COLD MIX IN TRENCH IMMEDIATELY AFTER BACKFILL AND PRIOR TO OPENING UP TO TRAFFIC.
11. CLASS 2 AGGREGATE BASE MIN. THICKNESS SHALL BE:

    STATE HIGHWAYS.....AS DIRECTED BY CALTRANS
    ALLEYS.....4"
    LOCAL STREETS.....6"
    COLLECTOR STREETS.....8"
    MAJOR ARTERIALS.....10"

12. NON-METALLIC SEWERLINES SHALL BE INSTALLED WITH A MAGNETIC TRACER TAPE AS SHOWN ABOVE. ALL WATERLINES AND SEWER FORCE MAINS SHALL BE INSTALLED WITH 10-GA. INSULATED SOLID COPPER TRACER WIRE, SECURED TO THE CENTER OF THE TOP OF THE PIPE WITH TAPE AT 5' INTERVALS. ADJACENT TO EA. MANHOLE AND LIFT STATION, A TU-G05 UTILITY WELL SHALL BE INSTALL PER DRAWING NO. 6030 FOR ACCESS TO FORCE MAIN TRACER WIRE. TRACER WIRE TO BE INSTALLED PER DRAWING NO. 6325 WIRE SHALL BE CONTINUOUS AND TESTED FOR CONTINUITY. WIRE TO SERVICES, FIRE LINES, ETC. SHALL BE JOINED TO WIRE ON MAIN. ALL JOINTS IN WIRE TO BE SOLDERED AND WRAPPED WITH ELECTRICAL TAPE.

REVISIONS	DATE

CITY OF TULARE
PUBLIC IMPROVEMENT STANDARD

TRENCH BACKFILL / PATCH PAVING

DRAWING NO.: 6020

Approved By:

Date: 1/1/16 City Engineer

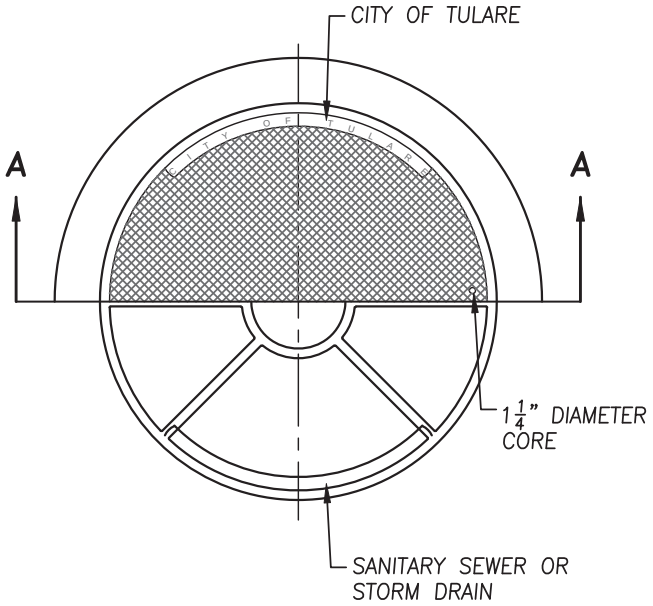

COVER

FRAME

MANHOLE COVER:

1. MANHOLE FRAME AND COVER SHALL HAVE A 24" CLEAR OPENING AND A SEALED BLIND PICKHOLE (SOUTH BAY FOUNDRY 1000 OR APPROVED EQUAL). THE COVER SHALL BE LETTERED "SANITARY SEWER" OR "STORM DRAIN" AS REQUIRED. THE INSIDE OF THE FRAME SHALL BE GROUTED WITH NON-SHRINK GROUT.
2. MATERIALS AND DESIGN SHALL BE SUITABLE FOR H-20 LOADING.
3. EXISTING PAVEMENT SHALL BE CUT UNIFORMLY.
4. UPON COMPLETION OF MANHOLE, ANY DEBRIS AT BOTTOM OF MANHOLE SHALL BE REMOVED TO THE SATISFACTION OF THE PUBLIC WORKS INSPECTOR.

ADJUSTMENT TO GRADE:
ADJUST TO GRADE PER CITY STANDARDS AND DWG. NO. 6030

COLLAR:
COLLAR SHALL BE CONSTRUCTED PER DRAWING NO. 6030

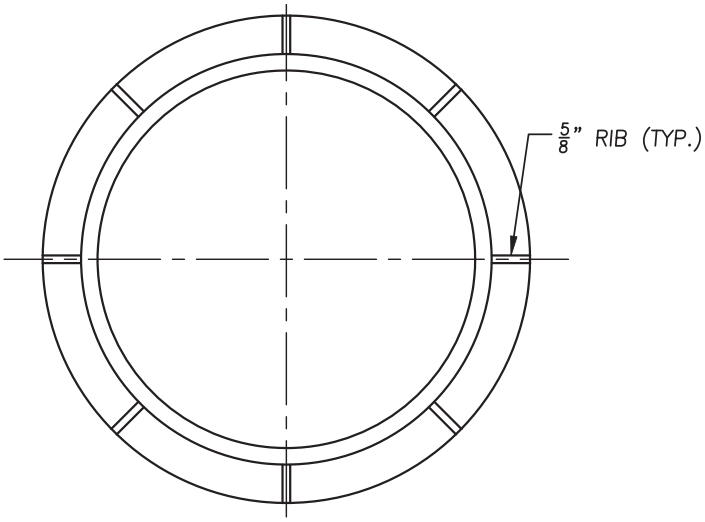

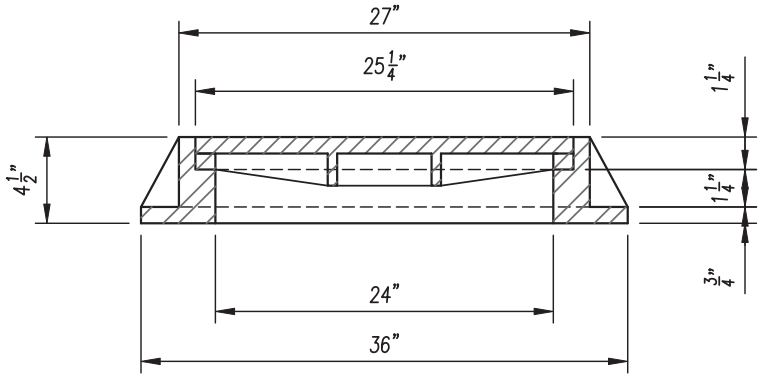

SECTION A-A

REVISIONS	DATE

CITY OF TULARE
PUBLIC IMPROVEMENT STANDARD

STANDARD MANHOLE FRAME AND COVER

DRAWING NO.: 6025

Approved By:

Date: 1/1/16 City Engineer

1 OF 1

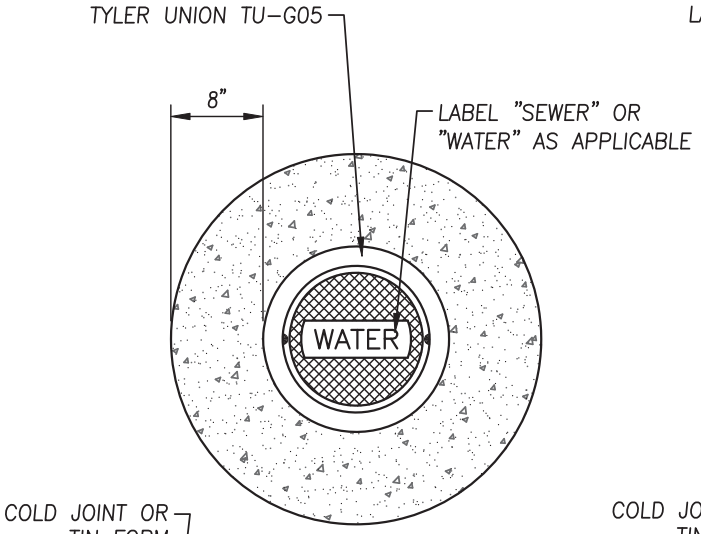

PLAN

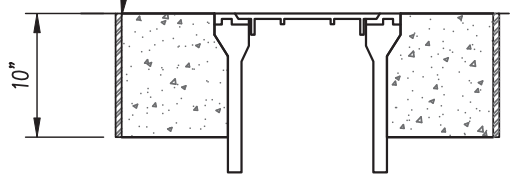

SECTION
VALVE BOX

WATER VALVE AND SEWER CLEANOUT

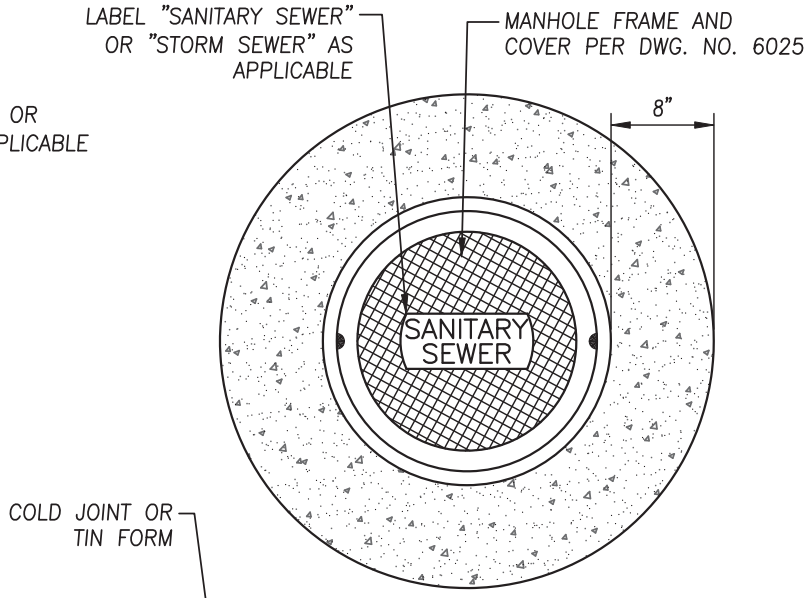

PLAN

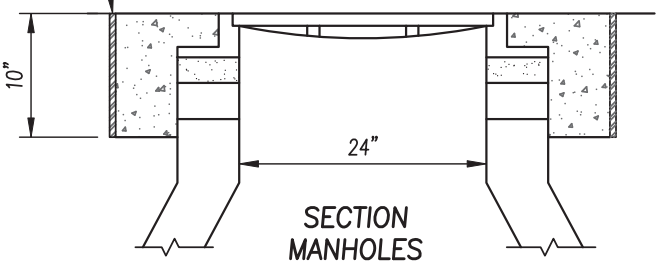

SECTION
MANHOLES

STORM DRAIN AND SANITARY SEWER

NOTES:

1. COMPLETELY REMOVE EXISTING CONCRETE COLLAR (IF APPLICABLE) PRIOR TO PLACING NEW CONCRETE COLLAR. THE DIAMETER OF THE NEW COLLAR SHALL BE EQUAL TO THE EXISTING COLLAR OR THE MINIMUM DIAMETER SPECIFIED IN THE ABOVE DETAIL, WHICHEVER IS LARGER.

2. CONCRETE SHALL BE CLASS 2 CONCRETE, TROWELED TO STREET GRADE, AND ALLOWED TO CURE FOR 48 HOURS PRIOR TO ANY TRAFFIC USE.

3. ALL UTILITY COVERS TO BE RAISED SHALL BE REPLACED, IF NEEDED, TO CONFORM TO COVERS SPECIFIED ABOVE. COVERS SHALL BE IMPRINTED WITH THE APPROPRIATE UTILITY NAME.

4. DEPTH AND RADIUS DIMENSIONS SHOWN APPLY TO SIMILAR COVERS THAT ARE NOT SHOWN.

5. COLLARS CONSTRUCTED IN P.C.C. STREETS SHALL BE CIRCULAR IN SHAPE AND SHALL BE SEPARATED FROM THE ADJACENT P.C.C. STREET BY EITHER A COLD JOINT OR A TIN FORM.

6. THE TOTAL HEIGHT GRADE RINGS SHALL NOT EXCEED 18" NOR BE LESS THAN 6". GRADE RINGS AND MANHOLE FRAME SHALL BE SEALED AT EVERY JOINT WITH BUTYL RUBBER (CONSEAL CS-102 OR EQUAL). WHEN PROPER GRADE CANNOT BE ACHIEVED WITH STANDARD GRADE RINGS, THE MANHOLE FRAME SHALL BE SUSPENDED IN POSITION OVER THE LAST GRADE RING, THE INSIDE OF THE FRAME AND SHAFT SHALL BE FORMED WITH TUBE OR MONOFORM SYSTEM, AND THE CONCRETE COLLAR SHALL BE POURED TO PROVIDE THE JOINT BETWEEN THE MANHOLE FRAME AND THE GRADE RING STACK. INSIDE OF RINGS SHALL BE GROUTED WITH NON-SHRINK GROUT TO OBTAIN A SMOOTH SURFACE FREE FROM GAPS, HOLES AND SHARP EDGES. 2" CLEARANCE APPLIES TO THE LOW SIDE OF THE FRAME. CLEARANCE MAY BE GREATER ON THE HIGH SIDE AS DICTATED BY THE STREET GRADES AND AS DIRECTED BY THE CITY ENGINEER. USE 6" CONCRETE REDUCING RINGS IN CASES WHERE EXISTING MANHOLE OPENING MUST BE REDUCED TO ACCOMMODATE THE NEW FRAME AND COVER.

7. WHEN A ROADWAY IS OVERLAID WITH ASPHALT CONCRETE, THE CONTRACTOR MAY USE EXTENSION RINGS TO ADJUST UTILITY COVERS TO THE NEW SURFACE ELEVATION. WHEN EXTENSION RINGS ARE USED TO ADJUST GRADE, A PREFORMED THERMOPLASTIC RING SHALL BE APPLIED AROUND THE PERIMETER OF THE CONCRETE. EXTENSION RING SHALL BE COMPATIBLE WITH THE EXISTING COVER. THERMOPLASTIC RING WIDTH SHALL BE A MINIMUM OF 6 INCHES.

REVISIONS	DATE

CITY OF TULARE
INCORPORATED APRIL 5, 1888

CITY OF TULARE
PUBLIC IMPROVEMENT STANDARD

UTILITY COVER - GRADE ADJUSTMENT AND P.C.C. COLLAR

DRAWING NO.: 6030

Approved By:

Date: 1/1/16 City Engineer

1 OF 1

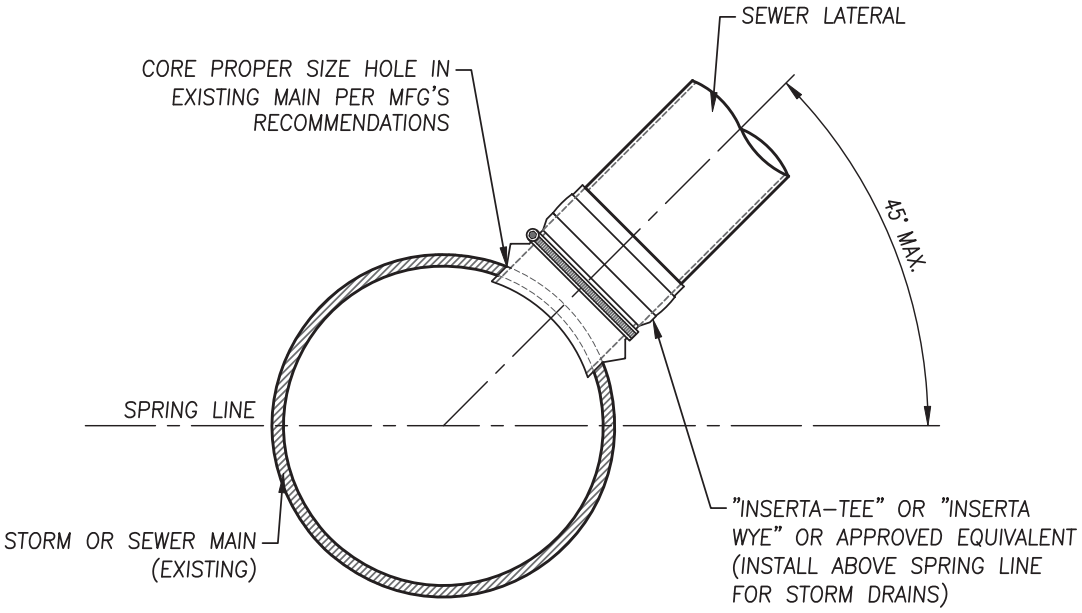

STORM DRAIN OR SEWER CONNECTION

REVISIONS	DATE

CITY OF TULARE
PUBLIC IMPROVEMENT STANDARD

SEWER AND STORM DRAIN CONNECTION TO EXISTING MAIN

DRAWING NO.: 6035

Approved By:

Date: 1/1/16 City Engineer

1 OF 1

CRITERIA FOR THE SEPARATION OF WATER MAINS AND SANITARY SEWERS

A. PUBLIC HEALTH CONSIDERATIONS

SANITARY SEWERS MAY LEAK AND SATURATE THE SURROUNDING SOIL WITH SEWAGE. THIS IS CAUSED PRIMARILY BY STRUCTURAL FAILURE OF THE SEWER LINE, IMPROPERLY CONSTRUCTED JOINTS, AND SUBSIDENCE OR UPHEAVAL OF THE SOIL ENCASING THE CONDUIT. A SERIOUS PUBLIC HEALTH HAZARD EXISTS WHEN THE WATER MAINS ARE DEPRESSURIZED AND NO PRESSURE OR NEGATIVE PRESSURES OCCUR. THE HAZARD IS FURTHER COMPOUNDED WHEN, IN THE COURSE OF INSTALLING OR REPAIRING A WATER MAIN, EXISTING SEWER LINES ARE BROKEN. SEWAGE SPILLS INTO THE EXCAVATION AND, HENCE, ENTERS INTO THE WATER MAIN ITSELF. ADDITIONALLY, IF A WATER MAIN FAILS IN CLOSE PROXIMITY TO A SEWER LINE, THE RESULTANT FAILURE MAY DISTURB THE BEDDING OF THE SEWER LINE AND CAUSE IT TO FAIL. IN THE EVENT OF AN EARTHQUAKE OR MAN–MADE DISASTER, SIMULTANEOUS FAILURE OF BOTH CONDUITS MAY OCCUR.

THE WATER SUPPLIER IS RESPONSIBLE FOR THE QUALITY OF THE WATER DELIVERED TO CONSUMERS AND MUST TAKE ALL PRACTICAL STEPS TO MINIMIZE THE HAZARD OF SEWAGE CONTAMINATION TO THE PUBLIC WATER SUPPLY. PROTECTION OF THE QUALITY OF THE WATER IN THE PUBLIC WATER SYSTEM IS BEST ACHIEVED BY THE BARRIER PROVIDED BY THE PHYSICAL SEPARATION OF THE WATER MAINS AND SEWER LINES.

THIS DOCUMENT SETS FORTH THE CONSTRUCTION CRITERIA FOR THE INSTALLATION OF WATER MAINS AND SEWER LINES TO PREVENT CONTAMINATION OF THE PUBLIC WATER SUPPLIES FROM NEARBY SANITARY SEWERS.

B. BASIC SEPARATION STANDARDS

THE "CALIFORNIA WATERWORKS STANDARDS" SETS FORTH THE MINIMUM SEPARATION REQUIREMENTS FOR WATER MAINS AND SEWER LINES. THESE STANDARDS, CONTAINED IN SECTION 64630, TITLE 22, CALIFORNIA ADMINISTRATIVE CODE, SPECIFY:

(a) (1) PARALLEL CONSTRUCTION: THE HORIZONTAL DISTANCE BETWEEN PRESSURE WATER MAINS AND SEWER LINES SHALL BE AT LEAST 10 FEET.

(1) PERPENDICULAR CONSTRUCTION (CROSSING): PRESSURE WATER MAINS SHALL BE AT LEAST 12 INCHES ABOVE SANITARY SEWER LINES WHERE THESE LINES MUST CROSS.

(b) SEPARATION DISTANCES SPECIFIED IN (a) SHALL BE MEASURED FROM THE NEAREST EDGES OF THE FACILITIES.

(c) COMMON TRENCH: WATER MAINS AND SEWER LINES MUST NOT BE INSTALLED IN THE SAME TRENCH.

WHEN WATER MAINS AND SANITARY SEWERS ARE NOT ADEQUATELY SEPARATED, THE POTENTIAL FOR CONTAMINATION OF THE WATER SUPPLY INCREASES. THEREFORE, WHEN ADEQUATE PHYSICAL SEPARATION CANNOT BE ATTAINED, AN INCREASE IN THE FACTOR OF SAFETY SHALL BE PROVIDED, AS DIRECTED BY THE CITY ENGINEER, BY INCREASING THE STRUCTURAL INTEGRITY OF BOTH THE PIPE MATERIALS, JOINTS AND BACKFILL MATERIALS OR ENCASEMENT.

REVISIONS	DATE

CITY OF TULARE
PUBLIC IMPROVEMENT STANDARD

WATER - SEWER SEPARATION
CRITERIA TEXT

DRAWING NO.: 6110

Approved By:

Date: 1/1/16 City Engineer

C. EXCEPTIONS TO BASIC SEPARATION STANDARDS

LOCAL CONDITIONS, SUCH AS AVAILABLE SPACE, LIMITED SLOPE, EXISTING STRUCTURES, ETC., MAY CREATE A SITUATION WHERE THERE IS NO ALTERNATIVE BUT TO INSTALL WATER MAINS OR SEWER LINES AT A DISTANCE LESS THAN THAT REQUIRED BY THE BASIC SEPARATION STANDARDS. IN SUCH CASES, ALTERNATIVE CONSTRUCTION CRITERIA AS SPECIFIED IN SECTION E SHALL BE FOLLOWED, SUBJECT TO THE SPECIAL PROVISIONS IN SECTION D.

D. SPECIAL PROVISIONS

1. THE BASIC SEPARATION STANDARDS ARE APPLICABLE UNDER NORMAL CONDITIONS FOR SEWAGE COLLECTION LINES AND WATER DISTRIBUTION MAINS. MORE STRINGENT REQUIREMENTS MAY BE NECESSARY IF CONDITIONS SUCH AS HIGH GROUNDWATER EXIST.

2. SEWER LINES SHALL NOT BE INSTALLED WITHIN 26 FEET HORIZONTALLY OF A LOW HEAD (5 PSI OR LESS PRESSURE) WATER MAIN.

3. NEW WATER MAINS AND SEWERS SHALL BE PRESSURE TESTED WHERE THE CONDUITS ARE LOCATED 10 FEET APART OR LESS.

4. IN THE INSTALLATION OF WATER MAINS OR SEWER LINES, MEASURES SHOULD BE TAKEN TO PREVENT OR MINIMIZE DISTURBANCES OF THE EXISTING LINE. DISTURBANCE OF THE SUPPORTING BASE OF THIS LINE COULD EVENTUALLY RESULT IN FAILURE OF THIS EXISTING PIPELINE.

5. SPECIAL CONSIDERATION SHALL BE GIVEN TO THE SELECTION OF PIPE MATERIALS IF CORROSIVE CONDITIONS ARE LIKELY TO EXIST. THESE CONDITIONS MAY BE DUE TO SOIL TYPE AND/OR THE NATURE OF THE FLUID CONVEYED IN THE CONDUIT, SUCH AS A SEPTIC SEWAGE WHICH PRODUCES CORROSIVE HYDROGEN SULFIDE.

6. SEWER FORCE MAINS

   a. SEWER FORCE MAINS SHALL NOT BE INSTALLED WITHIN 10 FEET (HORIZONTALLY) OF A WATER MAIN.

   b. WHEN A SEWER FORCE MAIN MUST CROSS A WATER LINE, THE CROSSING SHOULD BE AS CLOSE AS PRACTICAL TO THE PERPENDICULAR. THE SEWER FORCE MAIN SHOULD BE AT LEAST 12 INCHES BELOW THE WATER LINE.

   c. WHEN A NEW SEWER FORCE MAIN CROSSES UNDER AN EXISTING WATER MAIN, ALL PORTIONS OF THE SEWER FORCE MAIN WITHIN 10 FEET (HORIZONTALLY) OF THE WATER MAIN SHALL BE ENCLOSED IN A CONTINUOUS SLEEVE.

   d. WHEN A NEW WATER MAIN CROSSES OVER AN EXISTING SEWER FORCE MAIN, THE WATER MAIN SHALL BE CONSTRUCTED OF PIPE MATERIALS WITH A MINIMUM RATED WORKING PRESSURE OF 235 PSI OR EQUIVALENT PRESSURE RATING.

E. ALTERNATIVE CRITERIA FOR CONSTRUCTION

THE CONSTRUCTION CRITERIA FOR SEWER LINES OR WATER MAINS WHERE THE BASIC SEPARATION STANDARDS CANNOT BE ATTAINED ARE SHOWN IN FIGURES 1 AND 2, DRAWING NO. 6120. THERE ARE TWO SITUATIONS ENCOUNTERED:

CASE 1 -- NEW SEWER LINE – NEW OR EXISTING WATER MAIN.

CASE 2 -- NEW WATER MAIN -- EXISTING SEWER LINE.

FOR CASE 1, THE ALTERNATE CONSTRUCTION CRITERIA APPLY TO THE SEWER LINE.

FOR CASE 2, THE ALTERNATE CONSTRUCTION CRITERIA MAY APPLY TO EITHER OR BOTH THE WATER MAIN AND SEWER LINE.

THE CONSTRUCTION CRITERIA SHOULD APPLY TO THE HOUSE LATERALS THAT CROSS ABOVE A PRESSURE WATER MAIN BUT NOT TO THOSE HOUSE LATERALS THAT CROSS BELOW A PRESSURE WATER MAIN.

F. CONSIDERATION OF RECYCLED WATER

1. RECYCLED WATER MAINS SHALL BE TREATED AS SEWER MAINS WHEN CONSIDERING THEIR SEPARATION FROM POTABLE WATER.

2. RECYCLED WATER MAINS SHALL BE TREATED AS POTABLE WATER MAINS WHEN CONSIDERING THEIR SEPARATION FROM SEWERS.

CASE 1
NEW SEWER MAIN BEING INSTALLED
(SEE FIGURE 1, DRAWING NO. 6120)

ZONE	SPECIAL CONSTRUCTION REQUIRED FOR SEWER
A	SEWER LINES PARALLEL TO WATER MAINS SHALL NOT BE PERMITTED IN THIS ZONE WITHOUT APPROVAL FROM THE CITY ENGINEER.
B	A SEWER LINE PLACED PARALLEL TO A WATER LINE SHALL BE CONSTRUCTED OF: 1. PLASTIC SEWER PIPE WITH RUBBER RING JOINTS (PER ASTM D3034) OR EQUIVALENT. 2. DUCTILE IRON PIPE WITH COMPRESSION JOINTS.
C	A SEWER LINE CROSSING A WATER MAIN SHALL BE CONSTRUCTED OF: 1. DUCTILE IRON PIPE WITH HOT DIP BITUMINOUS COATING AND MECHANICAL JOINTS. 2. A CONTINUOUS SECTION OF CLASS 305 (DR 14 PER AWWA C900) PLASTIC PIPE OR EQUIVALENT, CENTERED OVER THE PIPE BEING CROSSED. 3. ANY SEWER PIPE WITHIN A CONTINUOUS SLEEVE.
D	A SEWER LINE CROSSING A WATER MAIN SHALL BE CONSTRUCTED OF: 1. A CONTINUOUS SECTION OF DUCTILE IRON PIPE WITH HOT DIP BITUMINOUS COATING. 2. A CONTINUOUS SECTION OF CLASS 305 (DR 14 PER AWWA C900) PLASTIC PIPE OR EQUIVALENT, CENTERED OVER THE PIPE BEING CROSSED. 3. ANY SEWER PIPE WITHIN A CONTINUOUS SLEEVE.

CASE 2
NEW WATER MAIN BEING INSTALLED
(SEE FIGURE 2, DRAWING NO. 6120)

ZONE	SPECIAL CONSTRUCTION REQUIRED FOR WATER
A	NO WATER MAINS PARALLEL TO SEWERS SHALL BE CONSTRUCTED WITHOUT APPROVAL FROM THE CITY ENGINEER.
B	IF THE SEWER PARALLELING THE WATER MAIN DOES NOT MEET THE CASE 1, ZONE B REQUIREMENTS, THE WATER MAIN SHALL BE CONSTRUCTED OF: 1. DUCTILE IRON PIPE WITH HOT DIP BITUMINOUS COATING. 2. CLASS 305 PRESSURE RATED PLASTIC WATER PIPE (DR 14 PER AWWA C900) OR EQUIVALENT.
C	IF THE SEWER CROSSING THE WATER MAIN DOES NOT MEET THE CASE 1, ZONE C REQUIREMENTS, THE WATER MAIN SHALL HAVE NO JOINTS WITHIN 10' EACH WAY OF CROSSING. 1. DUCTILE IRON PIPE WITH HOT DIP BITUMINOUS COATING. 2. CLASS 305 PRESSURE RATED PLASTIC WATER PIPE (DR 14 PER AWWA C900) OR EQUIVALENT.
D	IF THE SEWER CROSSING THE WATER MAIN DOES NOT MEET THE CASE 1, ZONE D REQUIREMENTS, THE WATER MAIN SHALL HAVE NO JOINTS WITHIN 4 FEET FROM EITHER SIDE OF THE SEWER AND SHALL BE CONSTRUCTED OF: 1. DUCTILE IRON PIPE WITH HOT DIP BITUMINOUS COATING. 2. CLASS 305 PRESSURE RATED PLASTIC WATER PIPE (DR 14 PER AWWA C900) OR EQUIVALENT.

NOTES:

1. FOR CASE 1, ZONE C, THE SANITARY SEWER SHALL HAVE NO JOINTS WITHIN 10 FEET OF EITHER SIDE OF THE WATER MAIN.

2. ALL MAINS AND LATERALS SHALL HAVE TRACER WIRE PER DRAWING NO. 6020.

REVISIONS	DATE

CITY OF TULARE
PUBLIC IMPROVEMENT STANDARD

WATER - SEWER SEPARATION
CRITERIA TEXT

DRAWING NO.: 6110

Approved By:

Date: 1/1/16 City Engineer

CRITERIA FOR THE SEPARATION OF WATER MAINS AND SANITARY SEWERS

REFER TO DRAWING NO. 6110 FOR SEPARATION CRITERIA TEXT

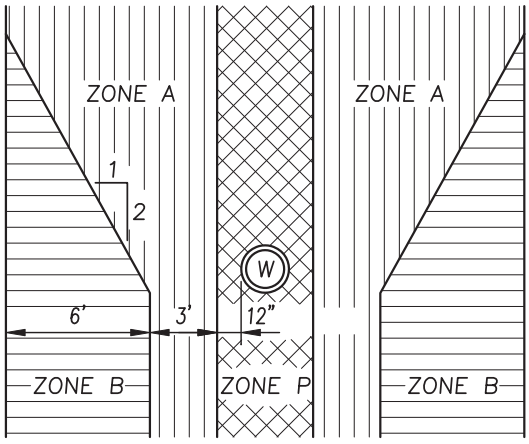

PARALLEL

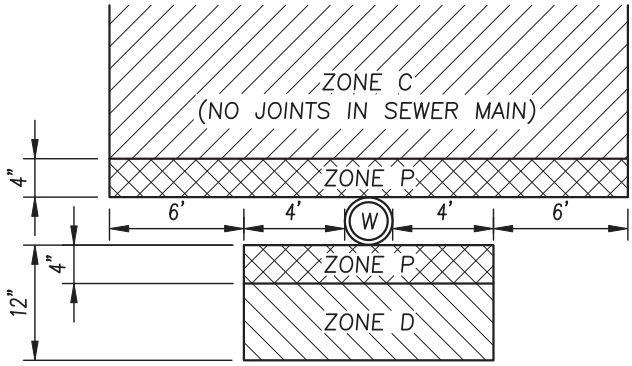

CASE 1

CROSSING

NEW SEWER MAIN

FIGURE 1

ZONE P IS A PROHIBITED ZONE, SECTION 64630(E)(2) CALIFORNIA ADMINISTRATIVE CODE, TITLE 22.

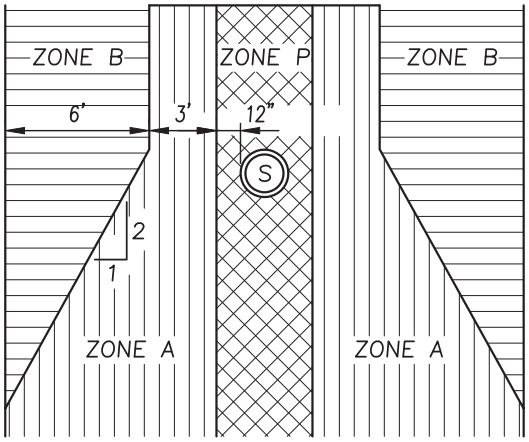

PARALLEL

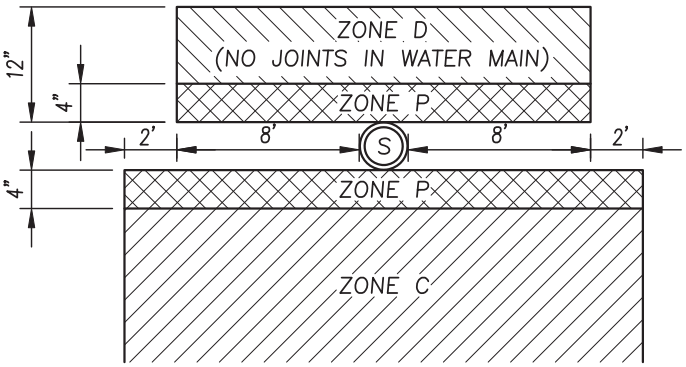

CASE 2

CROSSING

NEW WATER MAIN

FIGURE 2

NOTES AND DEFINITIONS

1. COMPRESSION JOINT – A PUSH–ON JOINT THAT SEALS BY MEANS OF THE COMPRESSION OF A RUBBER RING OR GASKET BETWEEN THE PIPE AND A BELL OR COUPLING.
2. DIMENSIONS ARE FROM THE OUTSIDE OF WATER MAIN TO OUTSIDE OF SEWER LINE OR MANHOLE.
3. FUSED JOINT – THE JOINING OF SECTIONS OF PIPE USING THERMAL OR CHEMICAL BONDING PROCESSES.
4. HOUSE LATERAL – A SEWER LINE CONNECTING THE BUILDING DRAIN AND THE SANITARY SEWER MAIN LINE IN THE STREET.
5. LOW HEAD WATER MAIN – ANY WATER MAIN WHICH HAS A PRESSURE OF 5 PSI OR LESS AT ANY TIME AT ANY POINT IN THE MAIN.
6. MECHANICAL JOINT – BOLTED JOINT
7. RATED WORKING WATER PRESSURE OR PRESSURE CLASS – A PIPE CLASSIFICATION SYSTEM BASED UPON INTERNAL WORKING PRESSURE OF THE FLUID IN THE PIPE, TYPE OF PIPE MATERIAL, AND THE THICKNESS OF THE PIPE WALL.
8. SLEEVE – A PROTECTIVE TUBE OF STEEL WITH A WALL THICKNESS OF NOT LESS THAN $\frac{1}{4}$" INTO WHICH A PIPE IS INSERTED.
9. WATER SUPPLIER – ANY PERSON OR ENTITCY WHO OWNS OR OPERATES A PUBLIC WATER SYSTEM.

REVISIONS	DATE

CITY OF TULARE INCORPORATED APRIL 5, 1888

CITY OF TULARE
PUBLIC IMPROVEMENT STANDARD

WATER - SEWER SEPARATION CRITERIA DETAILS

DRAWING NO.: 6120

Approved By:

Date: 1/1/16 City Engineer

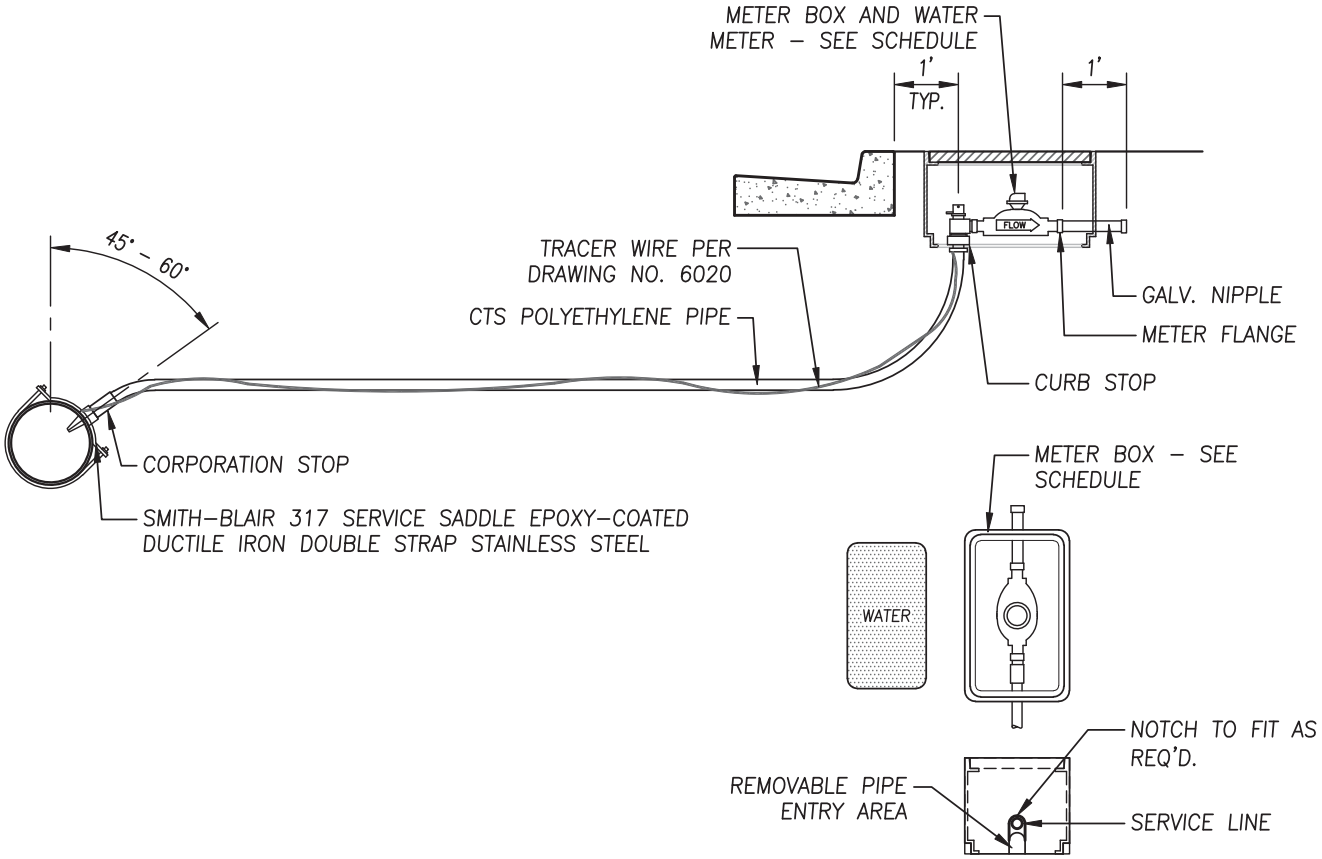

WATER SERVICE SCHEDULE			WATER METER BOX AND LID SCHEDULE – "OLD CASTLE PRECAST" (SUPPLIER)	
SERVICE PIPING	WATER METER: "MASTER METER"	3G REGISTER: "MASTER METER"	"CARSON" METER BOX	"CARSON" LID
$\frac{3}{4}$"	$\frac{3}{4}$"x7$\frac{1}{2}$" – PART NO. B13–A31–A01–010A–1 $\frac{3}{4}$"x9" – PART NO. B14–A31–A01–010A–1	3G DS USG UC83	SERVICE PIPING SIZES: $\frac{3}{4}$"–1" ITEM #: SP–CB13242500 DESCRIPTION: 1324–12 NEW TULARE METER BOX GREY	SERVICE PIPING SIZES: $\frac{3}{4}$"–1" ITEM #: SP–CB13244208 DESCRIPTION: 1324 NEW POLYMER LID FOR TULARE
1"	1"x10$\frac{3}{4}$" – PART NO. B16–A31–A01–0101A–1	3G DS USG UC83		
1$\frac{1}{2}$"	1$\frac{1}{2}$" – PART NO. M21–A00–A01–0101A–1	3G DS USG UC83	SERVICE PIPING SIZES: 1$\frac{1}{2}$"–2" ITEM #: SP–CB17302500 DESCRIPTION: CB1730–12 NEW TULARE BOX GREY	SERVICE PIPING SIZES: 1$\frac{1}{2}$"–2" ITEM #: SP–CB17304239 DESCRIPTION: 1730 NEW POLYMER LID FOR TULARE
2"	2" – PART NO. M23–A00–A01–0101A–1	3G DS USG UC83		

NOTES:

1. SERVICE PIPING SHALL BE POLYETHYLENE PIPE.
2. ALL FITTINGS SHALL BE SIZED ACCORDINGLY WITH SERVICE PIPING AND WATER METER.
3. CORPORATION STOPS, ANGLE METER STOPS AND METER FLANGES SHALL BE AS SHOWN OR APPROVED EQUAL.
4. PROVIDE STAINLESS STEEL TUBULAR INSERT STIFFENER AT THE POINT OF CONNECTION OF WATER MAIN AND POLYETHYLENE SERVICE PIPING.
5. WATER METER SHALL BE A COLD WATER DISPLACEMENT (SIZED ACCORDINGLY WITH SERVICE PIPING) TYPE METER READING IN U.S. GALLONS, CONFORMING TO A.W.W.A. MASTER METER 3G.
6. PROVIDE TRAFFIC RATED METER BOX AND LID IF LOCATED WITHIN DRIVE APPROACH.

REVISIONS	DATE

CITY OF TULARE INCORPORATED APRIL 5, 1888

CITY OF TULARE
PUBLIC IMPROVEMENT STANDARD

METERED WATER SERVICES 3/4" TO 2"

DRAWING NO.: 6210

Approved By:

Date: 1/1/16 City Engineer

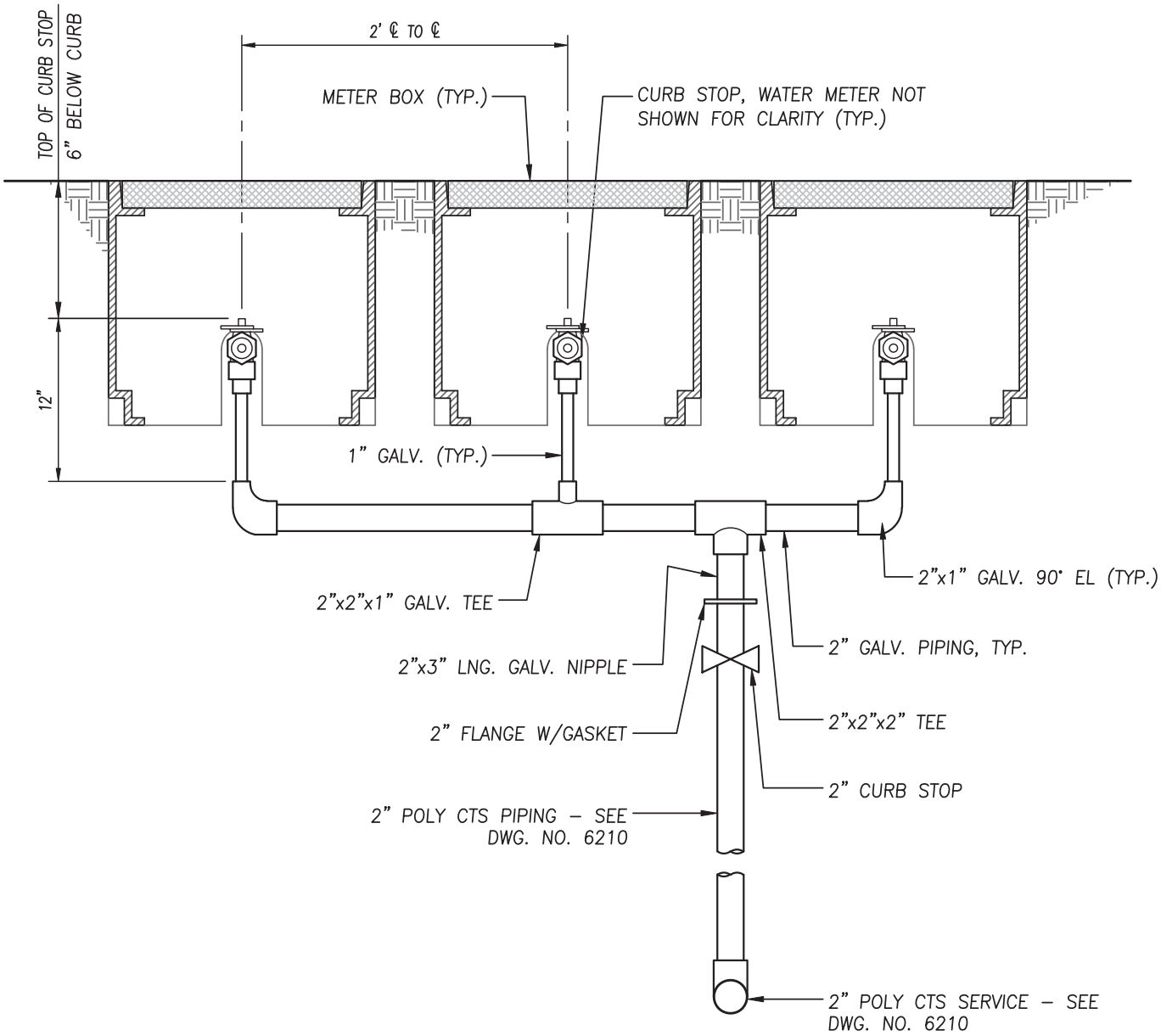

ELEVATION VIEW

NOTE:

1. SEE DRAWING NO. 6210 FOR CONNECTION TO WATER MAIN.

REVISIONS	DATE

CITY OF TULARE
PUBLIC IMPROVEMENT STANDARD

MANIFOLD - MULTIPLE WATER SERVICES

DRAWING NO.: 6215

Approved By:

Date: 1/1/16 City Engineer

1 OF 1

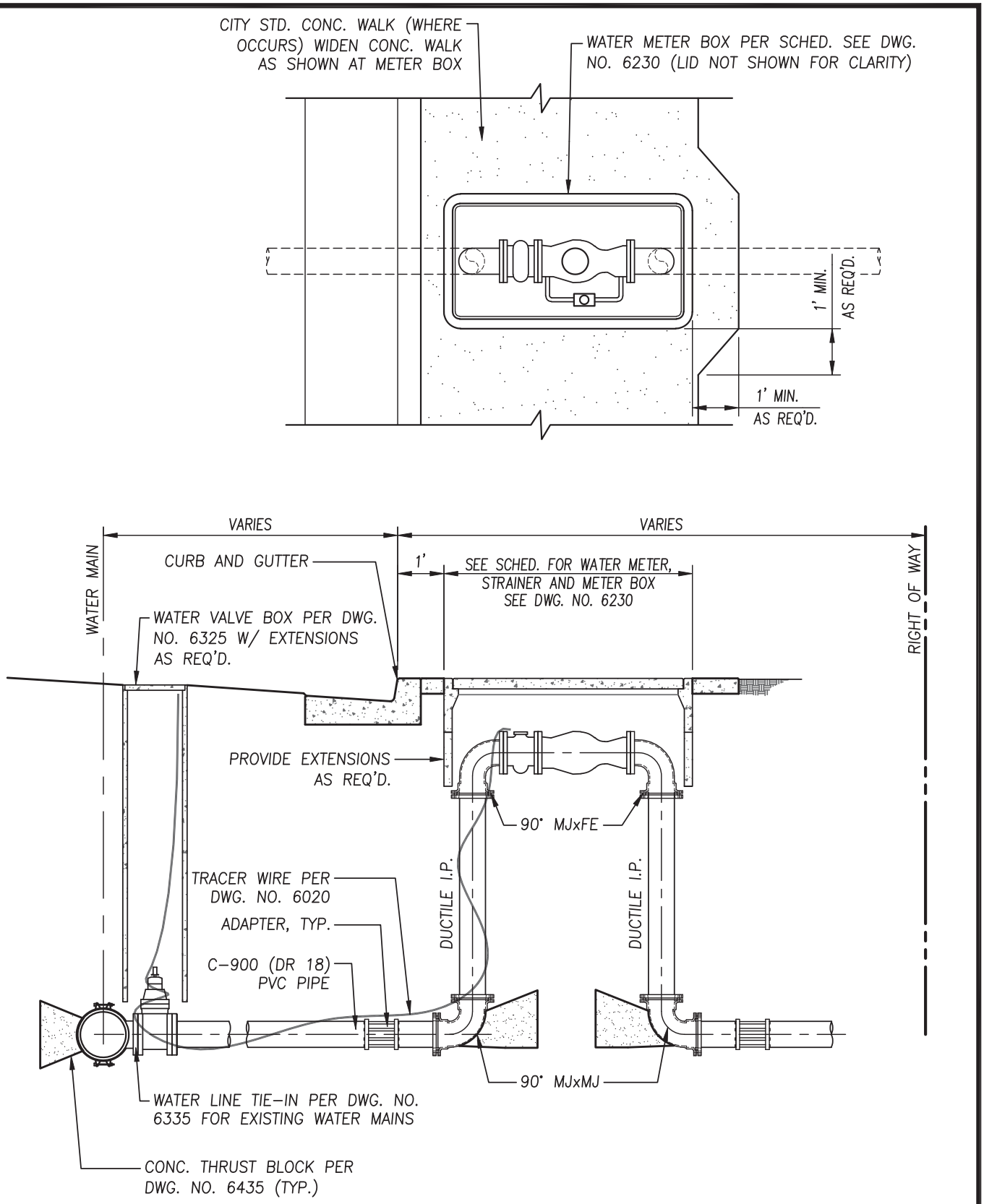

NOTE: SEE DWG. NO. 6230 FOR WATER METER SCHED. AND NOTES

REVISIONS	DATE

CITY OF TULARE
PUBLIC IMPROVEMENT STANDARD

DUAL BODY COMPOUND
METERED SERVICE, 3" TO 6"

DRAWING NO.: 6220

Approved By:

Date: 1/1/16 City Engineer

1 OF 1

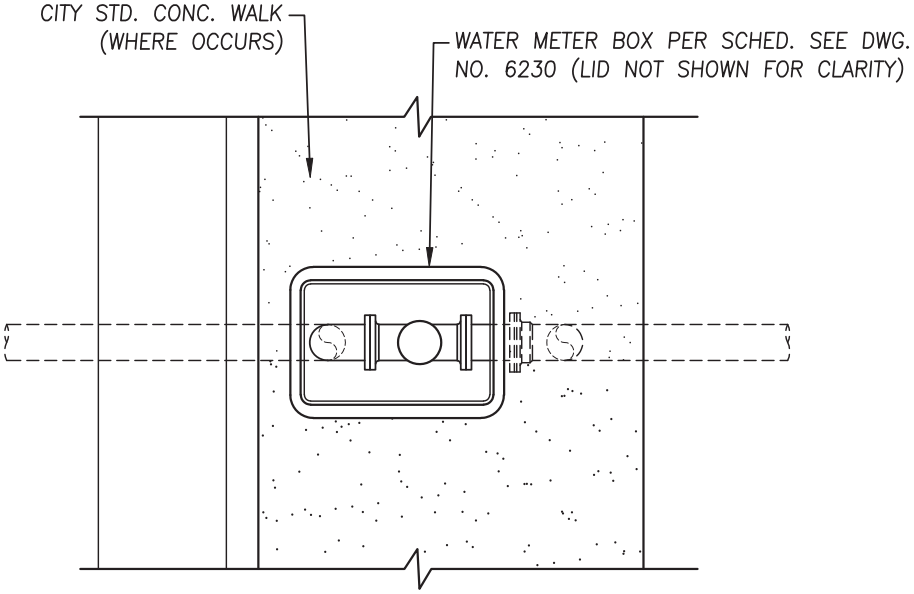

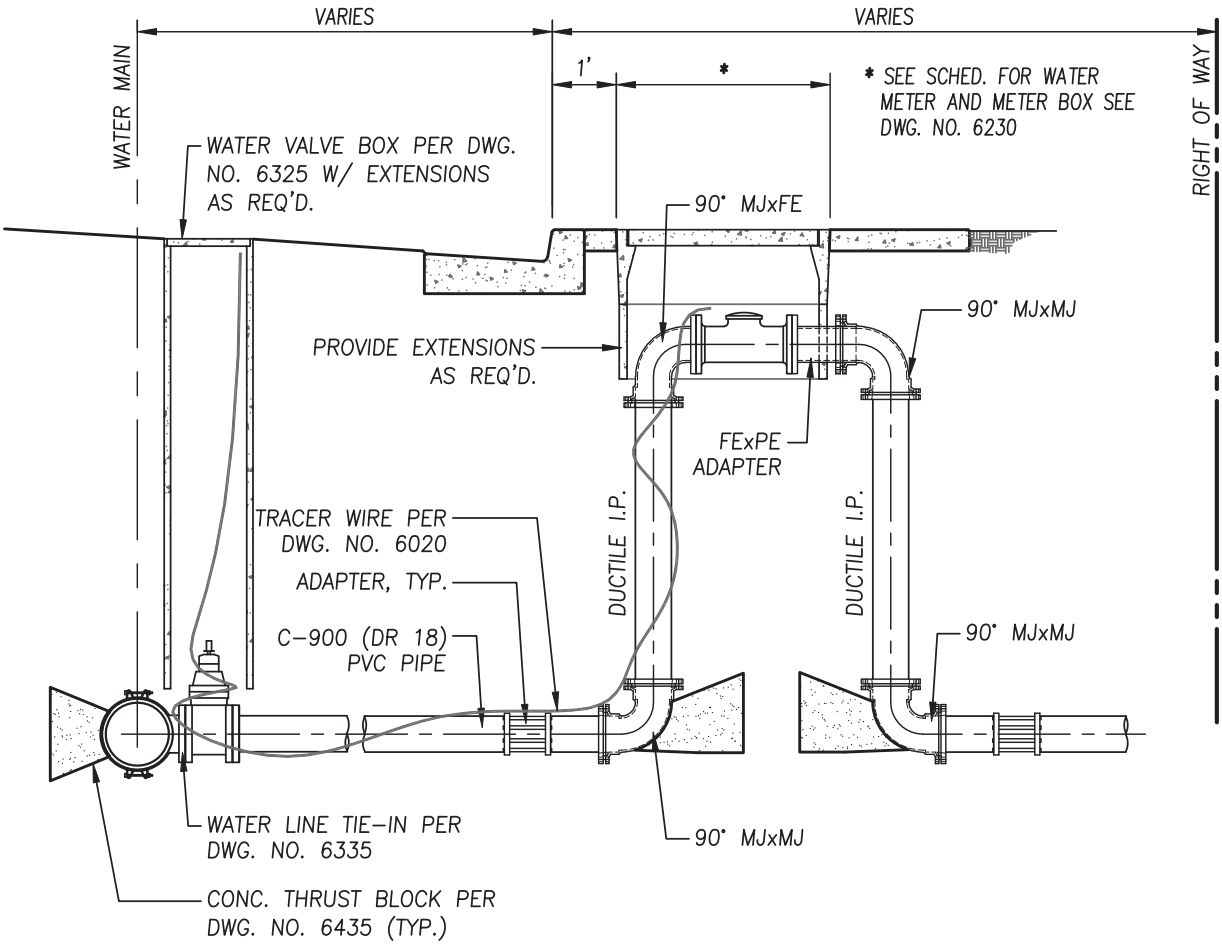

NOTE: SEE DWG. NO. 6230 FOR WATER METER SCHED. AND NOTES

REVISIONS	DATE

CITY OF TULARE
PUBLIC IMPROVEMENT STANDARD

OCTAVE METERED SERVICE,
3" TO 6"

DRAWING NO.: 6225

Approved By:

Date: 1/1/16 City Engineer

1 OF 1

WATER SERVICE SCHEDULE (DUAL BODY COMPOUND)

SERVICE PIPING	WATER METER ASSEMBLY – "MASTER METER"	METER BOX – "OLD CASTLE PRECAST"
3"	D32–A2–A02–0101A–1 3G USG, INTERPRETER/HIGH SIDE REGISTER, 3G DS LOW SIDE REGISTER, WITH STRAINER	CHRISTY B40 W/B40D REINFORCED CONC. LID
4"	D33–A2–A02–0101A–1 3G USG, INTERPRETER/HIGH SIDE REGISTER, 3G DS LOW SIDE REGISTER, WITH STRAINER	CHRISTY B48 W/B48D2 REINFORCED CONC. LID
6"	D34–A2–A02–0101A–1 3G USG, INTERPRETER/HIGH SIDE REGISTER, 3G DS LOW SIDE REGISTER, WITH STRAINER	CHRISTY B52 W/B52D3 REINFORCED CONC. LID

WATER SERVICE SCHEDULE (OCTAVE)

SERVICE PIPING	WATER METER – "MASTER METER"	METER BOX – "OLD CASTLE PRECAST"
3"	0303–EL–A09 MM OCTAVE METER	CARSON MSBCF1730–18XL W/17304359 LID
4"	0304–E1–A09 MM OCTAVE METER	CHRISTY B40 W/B40D REINFORCED CONC. LID
6"	306–E1–A09 MM OCTAVE METER	CHRISTY B40 W/B40D REINFORCED CONC. LID

NOTES:

1. ALL FITTINGS SHALL BE SIZE ACCORDINGLY WITH SERVICE PIPING AND WATER METER.
2. WATER METER SHALL BE A COLD WATER DISPLACEMENT (SIZED ACCORDINGLY WITH SERVICE PIPING) TYPE METER READING IN U.S. GALLONS, CONFORMING TO A.W.W.A. MASTER METER 3G.
3. REINFORCED CONCRETE LIDS SHALL BE PRE–CAST AND LABELED "WATER".
6. PROVIDE TRAFFIC RATED METER BOX AND LID IF LOCATED WITHIN DRIVE APPROACH.

REVISIONS	DATE

CITY OF TULARE
PUBLIC IMPROVEMENT STANDARD

SERVICE METER SCHEDULE
(DUAL BODY COMPOUND AND OCTAVE
3" TO 6")

DRAWING NO.: 6230

Approved By:

Date: 1/1/16 City Engineer

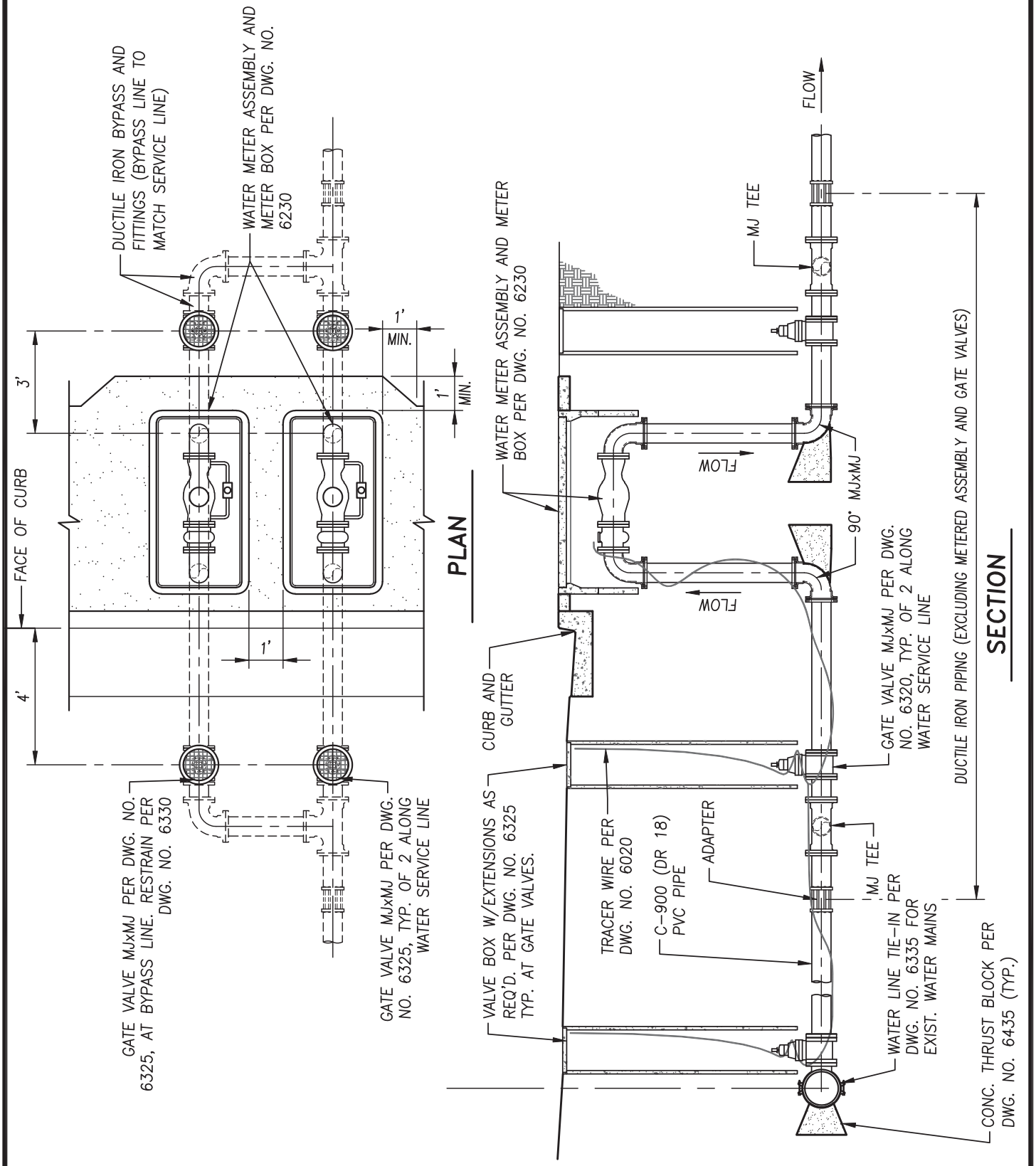

REVISIONS	DATE

CITY OF TULARE
PUBLIC IMPROVEMENT STANDARD

3" TO 6" METERED SERVICE WITH METERED BYPASS

DRAWING NO.: 6235

Approved By:

Date: 1/1/16 City Engineer

1 OF 1

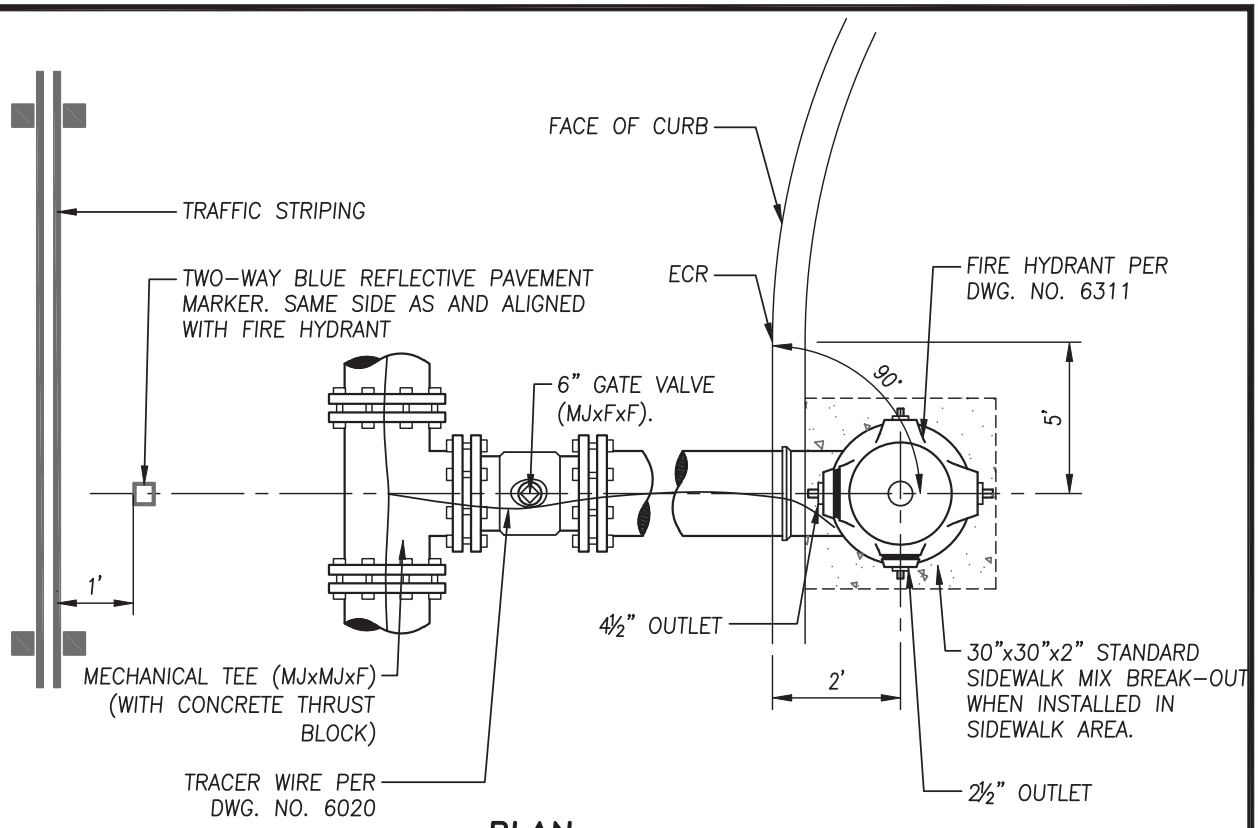

PLAN

NOTES:

1. CUT-IN TEE-M.J. X M.J. X FLANGE AT 6" MAINS. IF REGULAR LINE RUN TEE IS USED, A SWIVEL X SOLID ADAPTER (PUP) SHALL BE USED (SEE DWG. NO. 6330).
2. GATE VALVE, FLANGE X M.J., RESILIENT SEATED WITH FULLY-ENCAPSULATED GATE, EPOXY-COATED INSIDE & OUTSIDE, FULL-SIZE WATERWAY, OPEN TO THE LEFT, NON-RISING STEM WITH O-RING SEALS, AVK, CLOW F-6100, OR APPROVED EQUAL, AND SHALL CONFORM TO AWWA STANDARD C-509.
3. SEE DWG. NO. 6325 FOR VALVE, VALVE WELL & COLLAR DETAILS.
4. TAPPING SLEEVE - ROMAC SST-STAINLESS STEEL, OR APPROVED EQUAL. SEE DWG. NO. 6335.
5. LATERALS SHALL BE PVC (DR-18) OR DUCTILE IRON, 6 INCH MIN. DIAMETER.
6. THRUST BLOCK, CLASS 3 P.C.C., SHIELDED FROM FLANGES AND BOLTS.
7. SEE DWG. NO. 6335 FOR CUT-IN-TEE AT EXISTING 4" AND 6" MAINS.

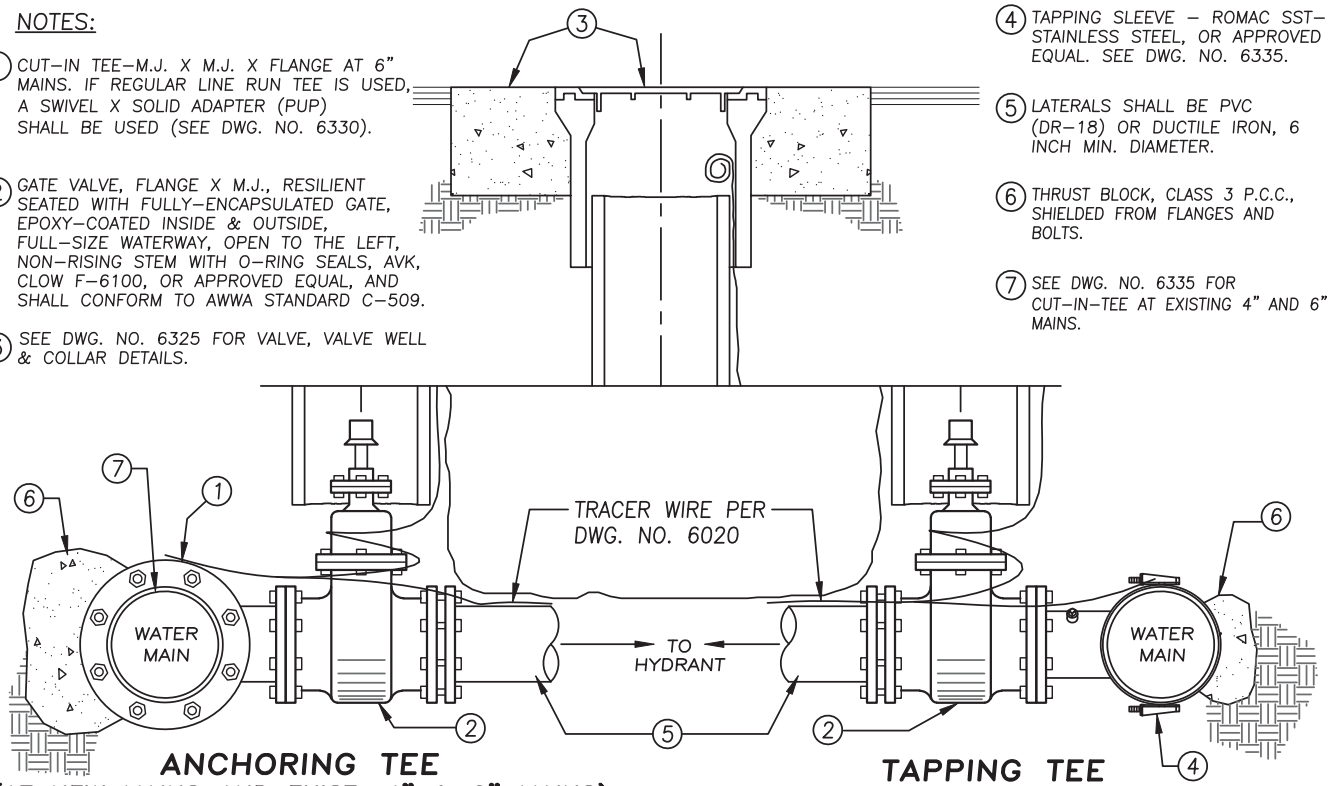

ANCHORING TEE
(AT NEW MAINS AND EXIST. 4" & 6" MAINS)

TAPPING TEE
(AT EXIST. MAINS, 8" & LARGER)

REVISIONS	DATE

CITY OF TULARE
PUBLIC IMPROVEMENT STANDARD

FIRE HYDRANT ASSEMBLY

DRAWING NO.: 6310

Approved By:

Date: 1/1/16 City Engineer

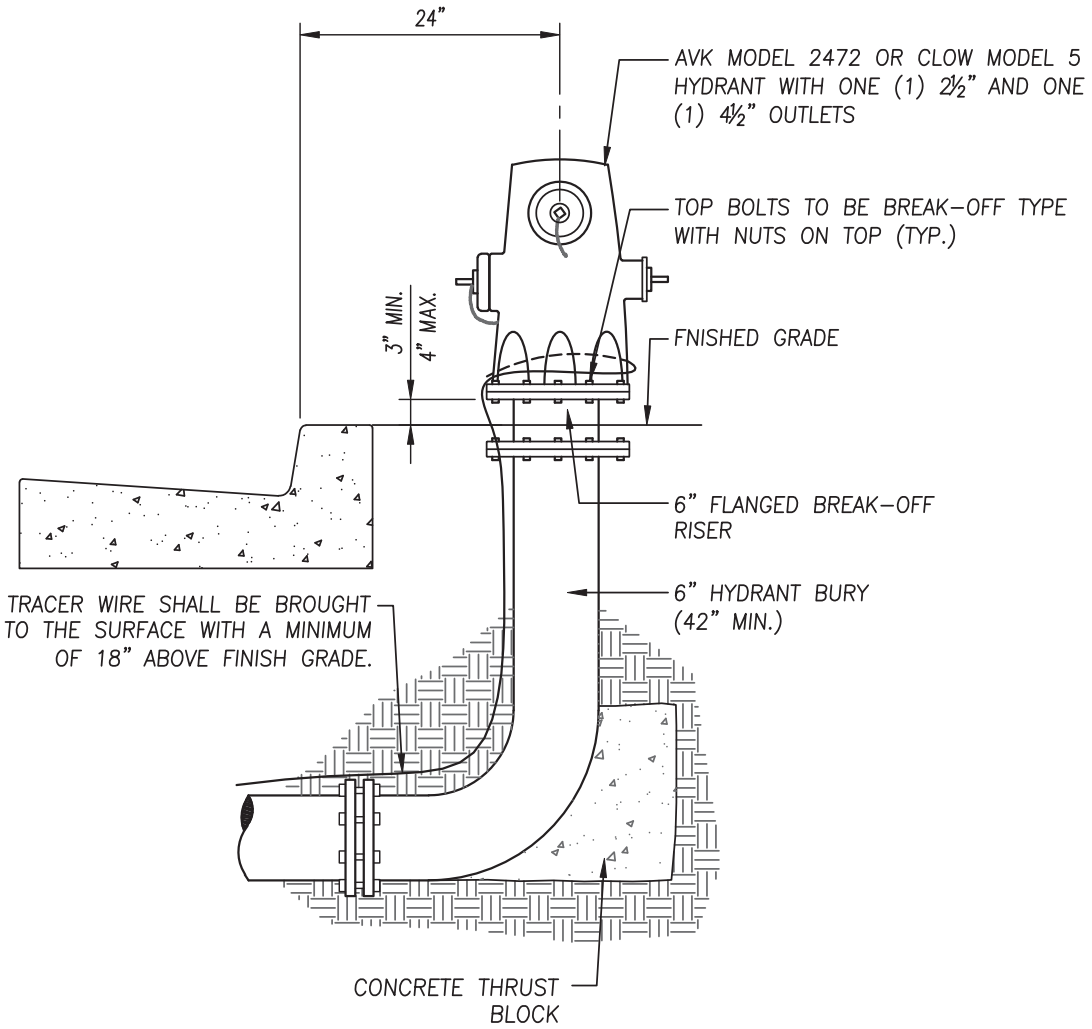

NOTES

1. MATERIALS AND CONSTRUCTION PROCDURE SHALL BE IN ACCORDANCE WITH "TECHNICAL SPECIFICATIONS NO 16, WATER MAINS."
2. COLOR SHALL BE YELLOW, ENAMEL VALSPAR SUNSET GLOW 3009-02, OR APPROVED EQUAL.
3. HYDRANT BURY SHALL BE DUCTILE IRON.
4. TRENCH AND PAVEMENT RESTORATION SHALL BE PERFORMED IN ACCORDANCE WITH CITY OF TULARE, "TECHNICAL SPECIFICATIONS NO. 8, TRENCH AND PAVEMENT RESTORATION."

REVISIONS	DATE

CITY OF TULARE
PUBLIC IMPROVEMENT STANDARD

FIRE HYDRANT

DRAWING NO.: 6315

Approved By:

Date: 1/1/16 City Engineer

1 OF 1

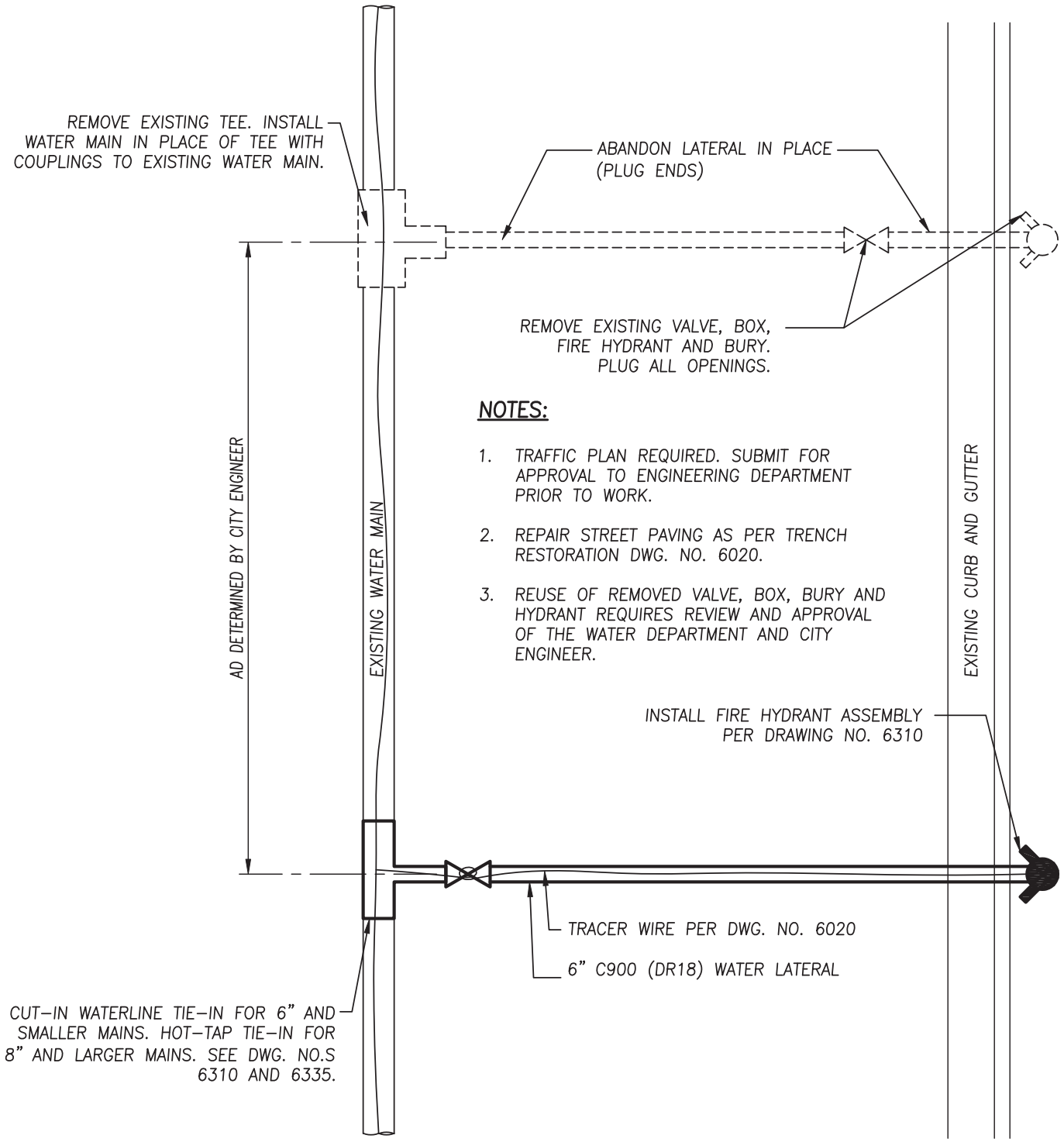

NOTES:

1. TRAFFIC PLAN REQUIRED. SUBMIT FOR APPROVAL TO ENGINEERING DEPARTMENT PRIOR TO WORK.
2. REPAIR STREET PAVING AS PER TRENCH RESTORATION DWG. NO. 6020.
3. REUSE OF REMOVED VALVE, BOX, BURY AND HYDRANT REQUIRES REVIEW AND APPROVAL OF THE WATER DEPARTMENT AND CITY ENGINEER.

REVISIONS	DATE

CITY OF TULARE
PUBLIC IMPROVEMENT STANDARD

FIRE HYDRANT REPLACEMENT

DRAWING NO.: 6320

Approved By:

Date: 1/1/16 City Engineer

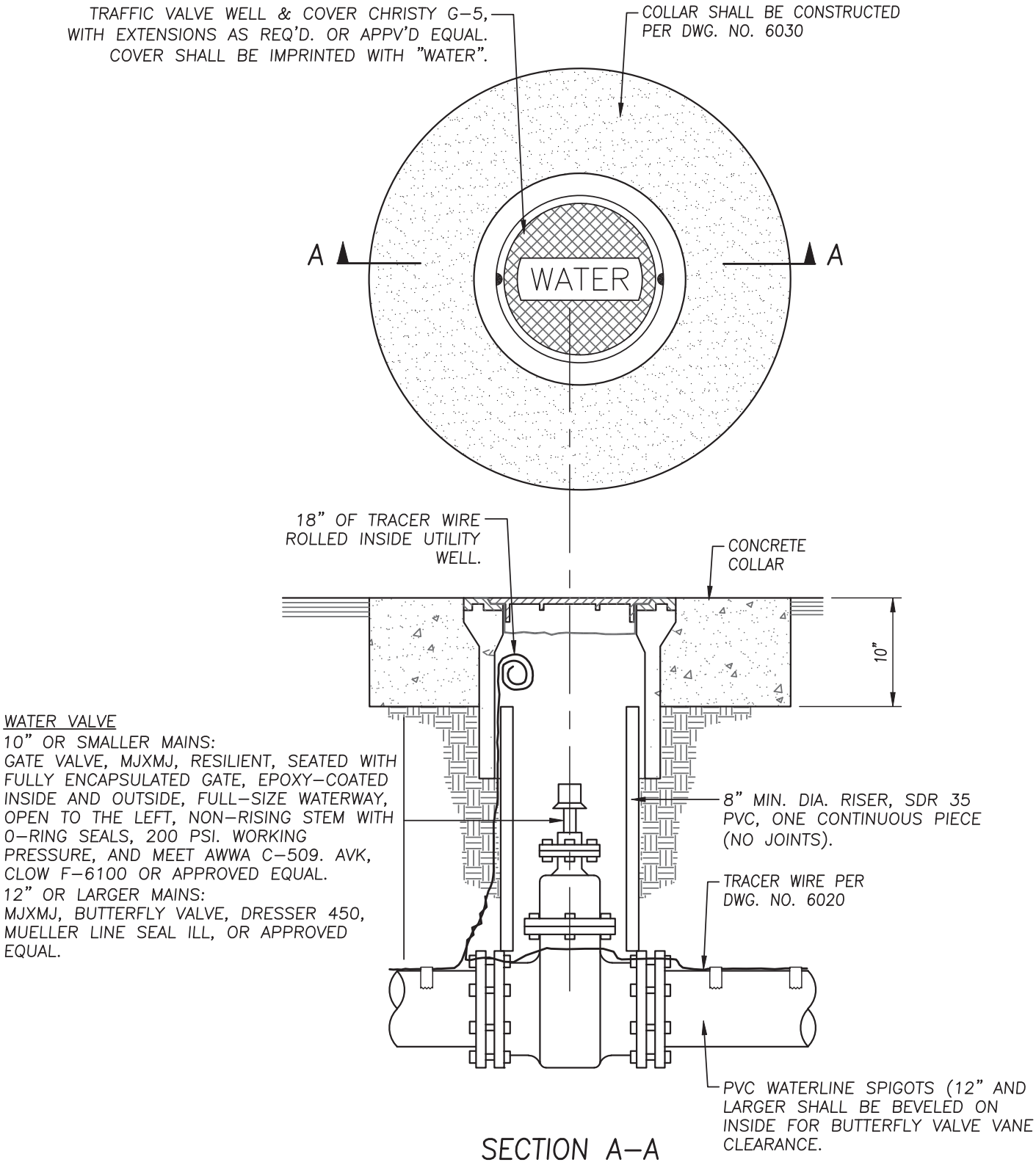

REVISIONS	DATE

CITY OF TULARE
PUBLIC IMPROVEMENT STANDARD

WATER VALVE AND WELL

DRAWING NO.: 6325

Approved By:

Date: 1/1/16 City Engineer

1 OF 1

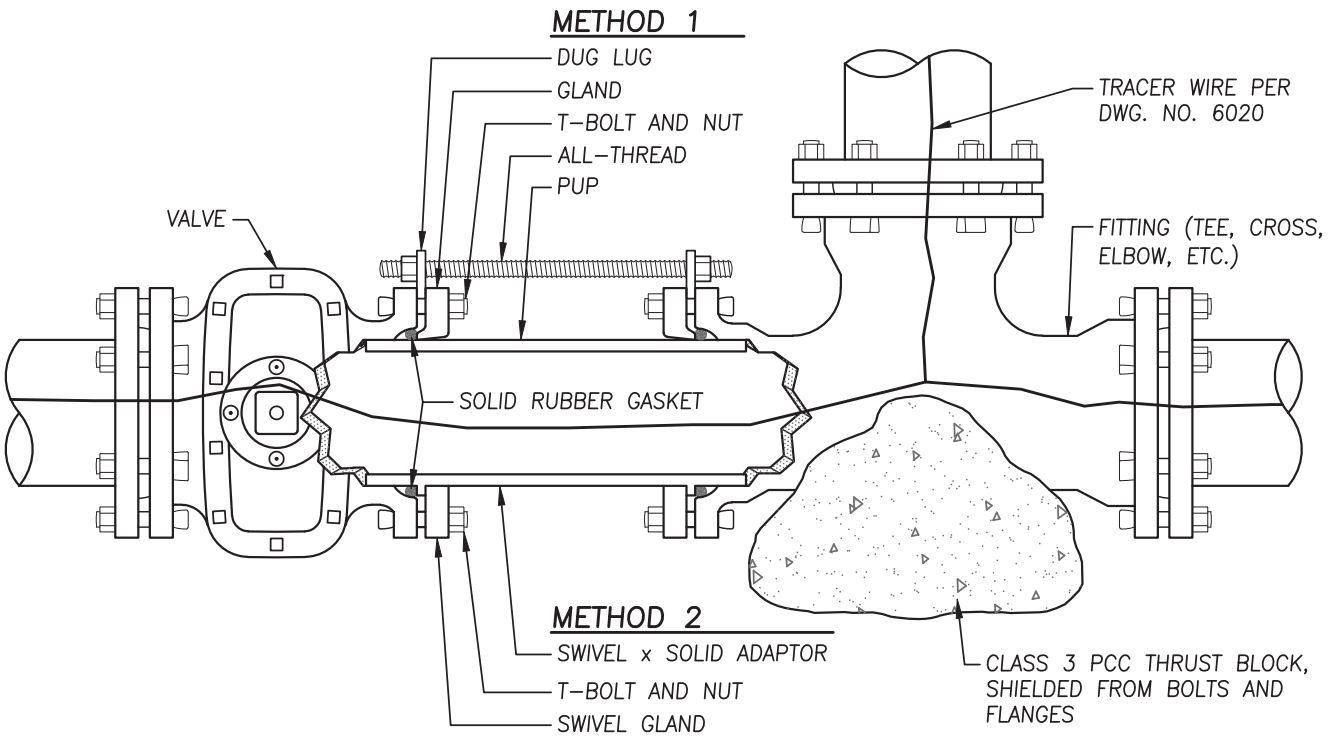

VALVES ADJACENT TO FITTINGS SHALL BE RESTRAINED IN ACCORDANCE WITH ONE OF THE FOLLOWING METHODS LISTED BELOW:

METHOD 1 – MAY BE USED ONLY WITH IN-LINE BOLT ALIGNMENT OF VALVE & FITTING. SEE CHART BELOW FOR NUMBER OF ALL THREADS. ALL-THREADS AND NUTS SHALL BE STAINLESS STEEL AND SHALL BE COATED WITH HENRY'S #204 ROOF CEMENT, OR EQUAL. THIS METHOD MAY BE USED ONLY WITH APPROVAL OF THE CITY WATER DEPARTMENT.

METHOD 2 – MAY BE USED WITH EITHER OFFSET OR IN-LINE BOLT ALIGNMENT.

METHOD 3 – FLANGE-TO-FLANGE BOLTED CONNECTION MAY BE USED.

METHOD 4 – RETAINER GLANDS MAY BE USED WITH DUCTILE IRON PIPE ONLY, SUB-JECT TO CITY APPROVAL. RETAINER GLANDS MAY NOT BE USED ON FIRE HYDRANT LATERALS.

METHOD 5 – SWIVEL GLAND & INTEGRAL RETAINING LIP CONNECTIONS MAY BE USED.

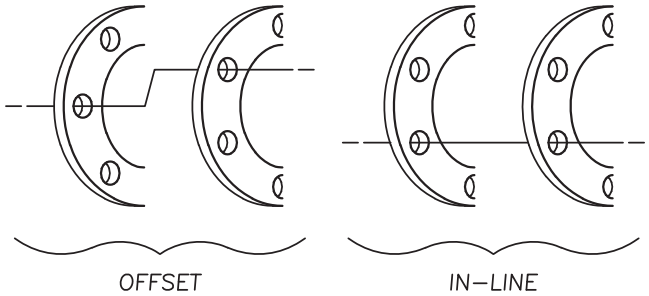

BOLT HOLE ALIGNMENT

METHOD 1	
PIPE SIZE (INCHES)	NO. OF ALL-THREADS (MIN.)
4	2
6, 8, 10	4
12, 14	6
OVER 14	TO BE DETERMINED IN FIELD

REVISIONS	DATE

CITY OF TULARE
PUBLIC IMPROVEMENT STANDARD

VALVE TO FITTING RESTRAINT

DRAWING NO.: 6330

Approved By:

Date: 1/1/16 City Engineer

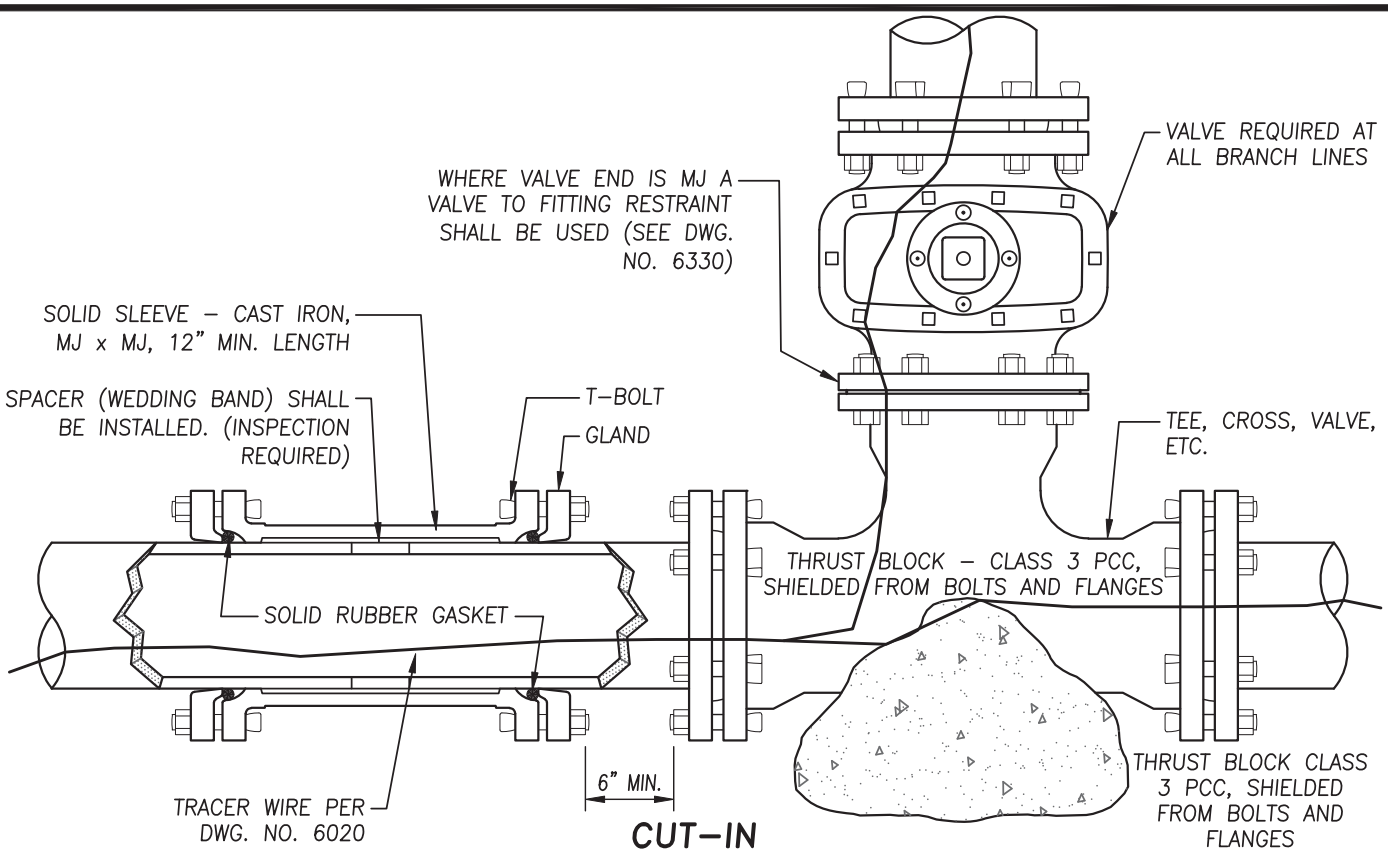

CUT–IN

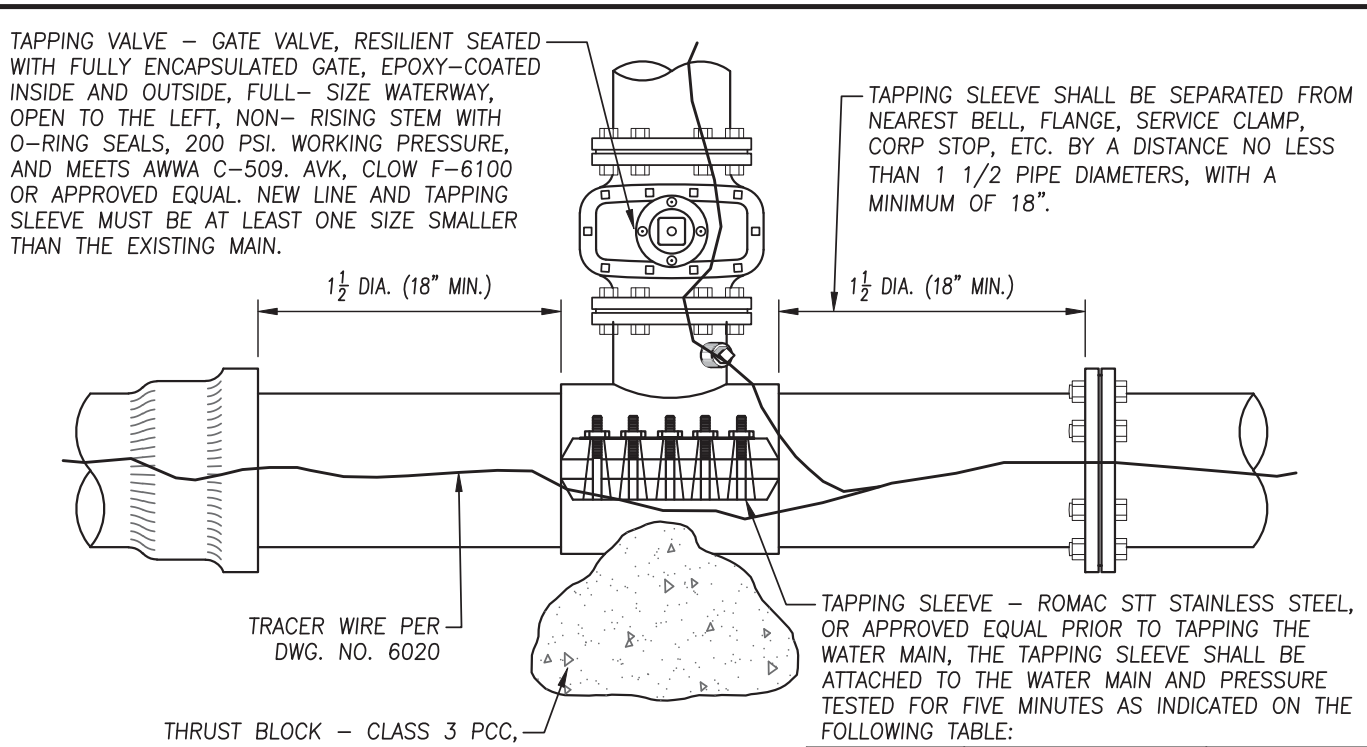

HOT TAP

PIPE SIZE	WORKING PRESSURE	TEST PRESSURE
4" – 8"	250 PSI	312 PSI
10" – 24"	200 PSI	300 PSI
26" – 30"	150 PSI	187 PSI

REVISIONS	DATE

CITY OF TULARE
PUBLIC IMPROVEMENT STANDARD

WATERLINE TIE-IN

DRAWING NO.: 6335

Approved By:

Date: 1/1/16 City Engineer

1 OF 1

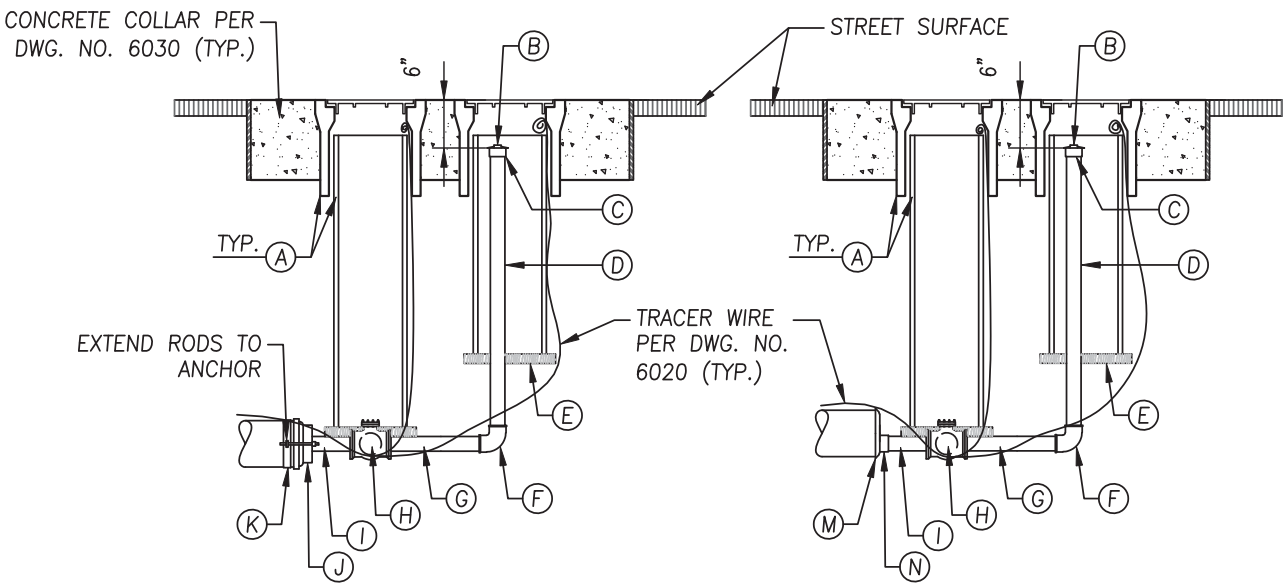

CAST IRON MAIN

WELDED STEEL MAIN

ITEM	MATERIAL	NO. REQ. EA.	CAST IRON MAIN					NO. REQ. EA.	WELDED STEEL MAIN					
			4"	6"	8"	10"	12"		4"	6"	8"	10"	12"	
A	GATE POT & COVER – 8"	2	✓	✓	✓	✓	✓	2	✓	✓	✓	✓	✓	
B	PLUG– 2" SCREW BLOCK	1	✓	✓	✓	✓	✓	1	✓	✓	✓	✓	✓	
C	COUPLING – 2" SCREW GALV.	1	✓	✓	✓	✓	✓	1	✓	✓	✓	✓	✓	
D	RISER – 2"x30" SCREW GALV.	1	✓	✓	✓	✓	✓	1	✓	✓	✓	✓	✓	
E	REDWOOD BLOCKING – 2"x4"x12"	4	✓	✓	✓	✓	✓	4	✓	✓	✓	✓	✓	
F	ELL – 2" SCREW GALV. 90°	1	✓	✓	✓	✓	✓	1	✓	✓	✓	✓	✓	
G	NIPPLE – 2"x12" SCREW GALV.	1	✓	✓	✓	✓	✓	1	✓	✓	✓	✓	✓	
H	CURB STOP – 2"	1	✓	✓	✓	✓	✓	1	✓	✓	✓	✓	✓	
I	NIPPLE – 2"x6" SCREW BRASS	1	✓	✓	✓	✓	✓	1	✓	✓	✓	✓	✓	
J	PLUG, COLLAR – PLUG & RODS	1	4"	6"	8"	10"	12"	–	–	–	–	–	–	
K	COLLAR – SINGLE	1	4"	6"	8"	10"	12"	–	–	–	–	–	–	
L	SLEEVE – C.I.	–	–	–	–	–	–	–	–	–	–	–	–	
M	BUMPED HEAD	–	–	–	–	–	–	1	4"	6"	8"	10"	12"	
N	COUPLING – 2" SCREW BLOCK	–	–	–	–	–	–	1	✓	✓	✓	✓	✓	

NOTE:
PAINT RODS, COLLARS, LUGS AND ENTIRE BLOW–OFF ASSEMBLY WITH E.C. 244 ADHESIVE.

REVISIONS	DATE

CITY OF TULARE
PUBLIC IMPROVEMENT STANDARD

BLOW-OFF ASSEMBLY

DRAWING NO.: 6340

Approved By:

Date: 1/1/16 City Engineer

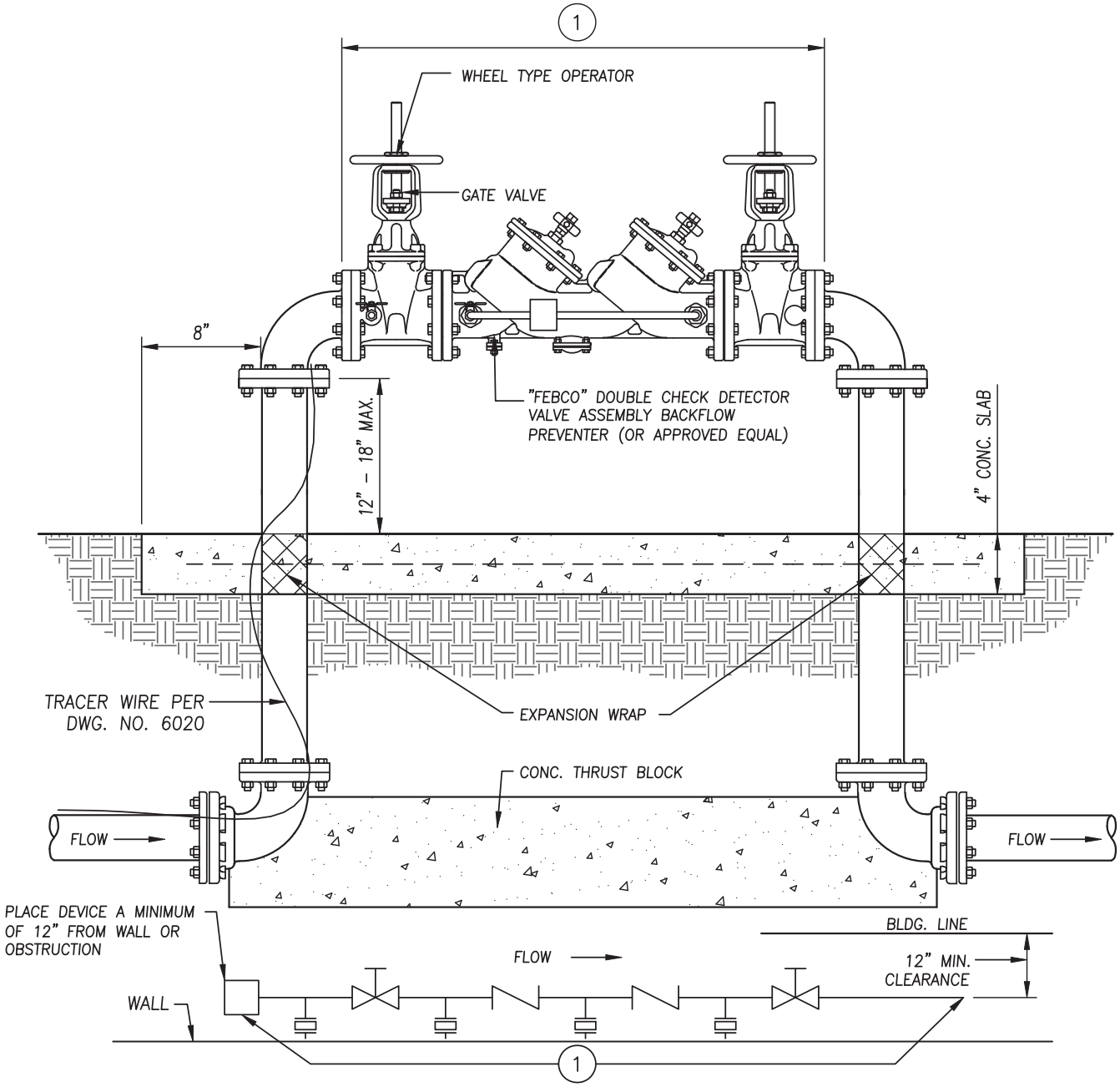

NOTES:

1. REDUCED PRESSURE PRINCIPLE ASSEMBLY.
2. EXPOSED PIPING TO BE INSULATED.
3. ALL FLANGED FITTINGS WHICH ARE BURIED SHALL HAVE PLASTIC WRAP, 30 MIL.
4. ALL THREE SIDES MUST BE LANDSCAPED AND SCREENED OR A "WEATHERGUARD BLANKET", OR "LOCKBOX", OR APPROVED EQUAL SHALL BE USED IN LIEU OF LANDSCAPING.
5. PAINT RUST–OLEUM #7771 SAND, HI–SOLIDS POLYURETHANE. SIZE OF DOUBLE DETECTOR CHECK SHALL MATCH FIRE SERVICE PIPING
6. PROVIDE $\frac{3}{8}$" CHAIN AND PADLOCKS FOR EACH GATE VALVE TO PREVENT UNAUTHORIZED OPERATION.

REVISIONS	DATE

CITY OF TULARE
PUBLIC IMPROVEMENT STANDARD

DOUBLE CHECK DETECTOR ASSEMBLY

DRAWING NO.: 6410

Approved By:

Date: 1/1/16 City Engineer

1 OF 1

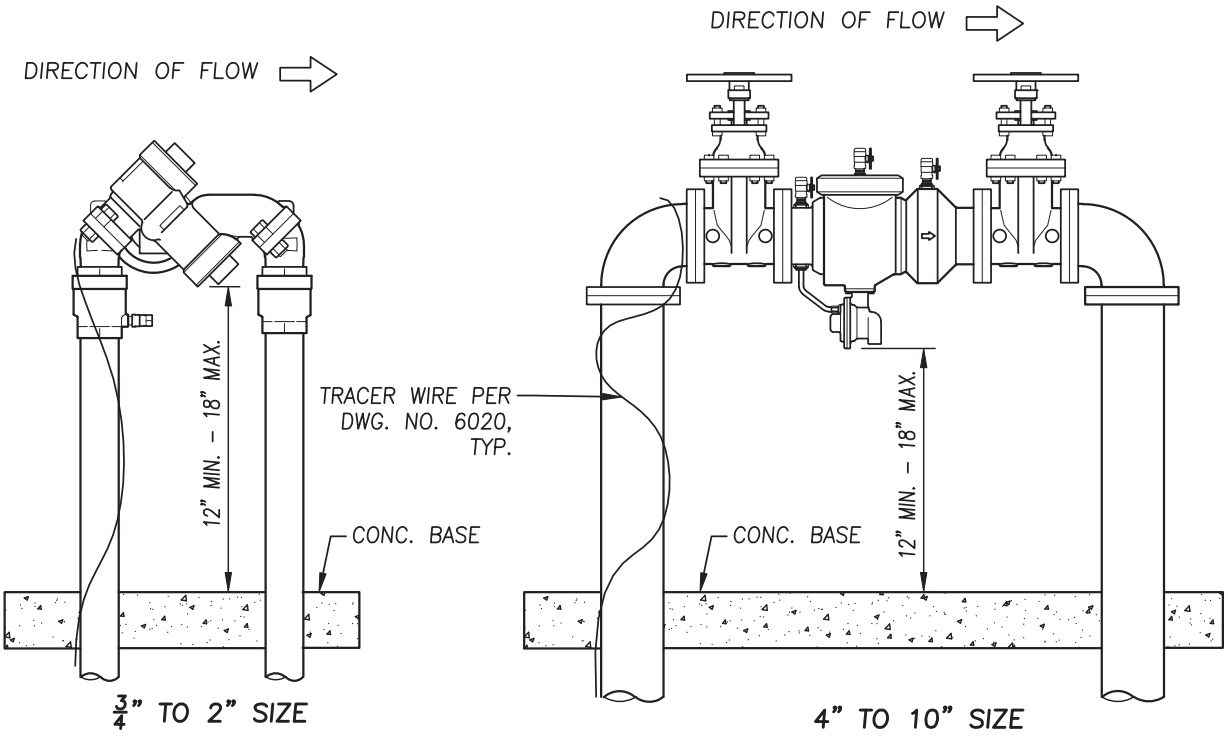

NOTES:

1. PIPE AND FITTINGS SHALL BE GALVANIZED WHEN DIAMETER IS BETWEEN 3/4" AND 2" AND DUCTILE IRON FOR PIPE LARGER THAN 2". DUCTILE IRON PIPE SHALL BE WRAPPED WITH TWO LAYERS OF UPC LISTED PLASTIC TAPE MINIMUM 40 ML. RESILIENT SEATED SHUT OFF VALVES AND TEST COCKS ARE REQUIRED.

2. THE MECHANICAL BACKFLOW PREVENTION ASSEMBLY SHALL BE INSTALLED SUBJECT TO THE APPROVAL OF THE CITY OF TULARE. ANY DEVIATION FROM THIS STANDARD MUST RECEIVE APPROVAL PRIOR TO INSTALLATION.

3. ALL MECHANICAL BACKFLOW PREVENTION ASSEMBLIES APPROVED BY THE CITY OF TULARE FOR INSTALLATION AT THE SERVICE CONNECTION HAVE BEEN EVALUATED AND APPROVED BY THE FOUNDATION FOR CROSS–CONNECTION CONTROL AND HYDRAULIC RESEARCH, UNIVERSITY OF SOUTHERN CALIFORNIA. THESE ASSEMBLIES ARE ONLY APPROVED FOR THE HORIZONTAL ORIENTATION, UNLESS SPECIFICALLY EVALUATED AND APPROVED BY THE LOCAL HEALTH DEPARTMENT FOR OTHER ORIENTATIONS. CHECK WITH THE LOCAL HEALTH DEPARTMENT.

4. CHOICE OF TYPE OF BACKFLOW PREVENTION ASSEMBLY, I.E. REDUCED PRESSURE PRINCIPLE OR DOUBLE CHECK VALVE ASSEMBLY, WILL BE BASED ON THE DEGREE OF HAZARD AS EVALUATED BY THE CITY OF ENGINEER.

5. BACKFLOW PREVENTER SHALL BE LOCATED WITHIN 10' OF WATER METER, UNLESS OTHERWISE APPROVED BY THE CITY ENGINEER. NO CONNECTIONS OR TEES ARE ALLOWED BETWEEN THE METER AND THE ASSEMBLY.

6. 3/4" – 2" RPB SHALL BE AN APPROVED DEVICE (SEE NOTE 3 ABOVE). 4" – 10" RPB SHALL BE AN APPROVED DEVICE (SEE NOTE 3 ABOVE).

REVISIONS	DATE

CITY OF TULARE
PUBLIC IMPROVEMENT STANDARD

R.P. BACKFLOW PREVENTER
(3/4" TO 10")

DRAWING NO.: 6415

Approved By:

Date: 1/1/16 City Engineer

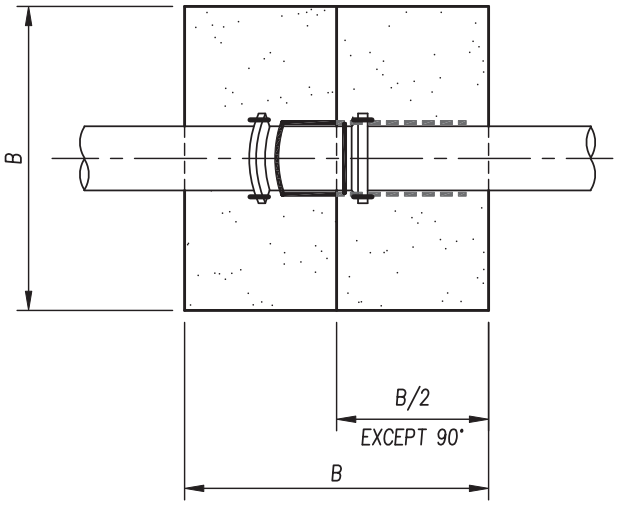

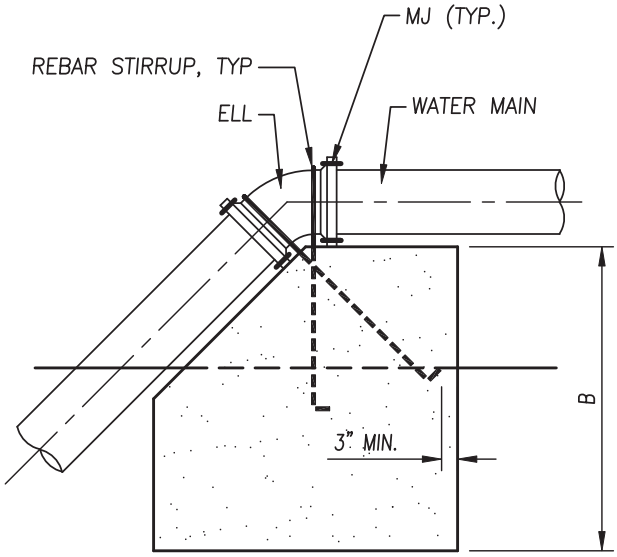

CONCRETE ANCHOR BLOCK FOR UPPER BENDS				
FITTING	ANCHOR BLOCK	STEEL STIRRUPS		
	B	QUANTITY	LENGTH	SIZE
4"x11$\frac{1}{4}$° ELL	1.25'	2	46"	#4
6"x11$\frac{1}{4}$° ELL	1.75'	2	51"	#4
8"x11$\frac{1}{4}$° ELL	2.00'	2	57"	#4
10"x11$\frac{1}{4}$° ELL	2.50'	2	62"	#4
12"x11$\frac{1}{4}$° ELL	2.75'	2	67"	#4
14"x11$\frac{1}{4}$° ELL	3.25'	2	72"	#4
16"x11$\frac{1}{4}$° ELL	3.50'	2	102"	#6
4"x22$\frac{1}{2}$° ELL	1.50'	2	46"	#4
6"x22$\frac{1}{2}$° ELL	2.25'	2	51"	#4
8"x22$\frac{1}{2}$° ELL	2.75'	2	57"	#4
10"x22$\frac{1}{2}$° ELL	3.25'	2	62"	#4
12"x22$\frac{1}{2}$° ELL	3.75'	2	91"	#6
14"x22$\frac{1}{2}$° ELL	4.25'	2	96"	#6
16"x22$\frac{1}{2}$° ELL	4.50'	2	102"	#6
4"x45° ELL	2.00'	2	46"	#4
6"x45° ELL	3.00'	2	51"	#4
8"x45° ELL	3.50'	2	81"	#6
10"x45° ELL	4.25'	2	86"	#6
12"x45° ELL	4.75'	2	91"	#6
14"x45° ELL	5.50'	2	144"	#8
16"x45° ELL	6.00'	2	149"	#8
4"x90° ELL	2.25'	2	46"	#4
6"x90° ELL	3.25'	2	51"	#4
8"x90° ELL	4.00'	2	81"	#6
10"x90° ELL	4.75'	2	86"	#6
12"x90° ELL	5.50'	2	139"	#8
14"x90° ELL	6.25'	2	144"	#8
16"x90° ELL	7.00'	2	186"	#10

NOTES:

1. ALL CONCRETE SHALL BE CLASS 3.
2. FITTINGS SHALL BE SEPARATED BY 4 MILS OF PLASTIC.
3. CONCRETE SHALL BE POURED AGAINST UNDISTURBED SOIL.
4. ALL STEEL STIRRUPS NOT EMBEDDED IN CONCRETE SHALL BE COATED WITH HOT TAR.

REVISIONS	DATE

CITY OF TULARE
PUBLIC IMPROVEMENT STANDARD

UPPER BEND ANCHOR BLOCK

DRAWING NO.: 6420

Approved By:

Date: 1/1/16 City Engineer

1 OF 1

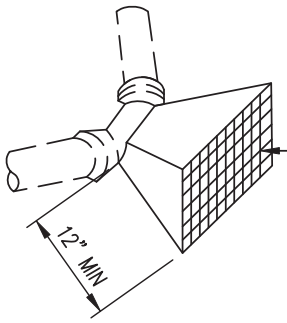

TYPICAL FOR BEND REQUIRED THRUST BLOCK AREA

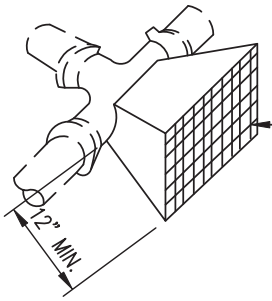

TYPICAL FOR TEE OUTLET REQUIRED THRUST BLOCK AREA

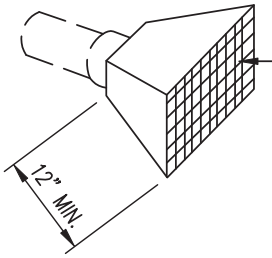

TYPICAL FOR DEAD END REQUIRED THRUST BLOCK AREA

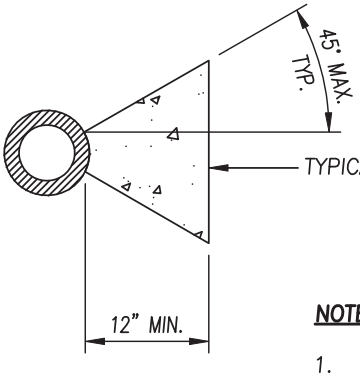

TYPICAL SECTION

THRUST BLOCK AREA REQUIREMENTS IN SQ. FT.	
FITTINGS	ALLOWABLE SOIL BEARING VALUE 2,000 lbs./sq.ft.
6" – $11\frac{1}{4}$° ELL	1.0
6" – $22\frac{1}{2}$° ELL	1.5
6" – 45° ELL	3.0
6" – 90° ELL	5.5
6" – TEE OUTLET	4.0
6" – DEAD END	4.0
8" – $11\frac{1}{4}$° ELL	1.5
8" – $22\frac{1}{2}$° ELL	3.0
8" – 45° ELL	5.0
8" – 90° ELL	9.5
8" – TEE OUTLET	6.5
8" – DEAD END	6.5
10" – $11\frac{1}{4}$° ELL	2.8
10" – $22\frac{1}{2}$° ELL	4.5
10" – 45° ELL	8.5
10" – 90° ELL	15.5
10" – TEE OUTLET	11.0
10" – DEAD END	11.0
12" – $11\frac{1}{4}$° ELL	3.0
12" – $22\frac{1}{2}$ ELL	6.0
12" – 45° ELL	12.0
12" – 90° ELL	22.0
12" – TEE OUTLET	15.5
12" – DEAD END	15.5

NOTES:

1. ALL CONCRETE FOR THRUST BLOCKS SHALL BE CLASS 3.
2. FITTINGS SHALL BE SEPARATED FROM CONCRETE BY 4 MILS. OF PLASTIC. JOINTS SHALL BE KEPT FREE FROM CONCRETE.
3. CONCRETE SHALL BE POURED AGAINST UNDISTURBED SOIL.

REVISIONS	DATE

CITY OF TULARE
PUBLIC IMPROVEMENT STANDARD

THRUST BLOCKS

DRAWING NO.: 6425

Approved By:

Date: 1/1/16 City Engineer

1 OF 1

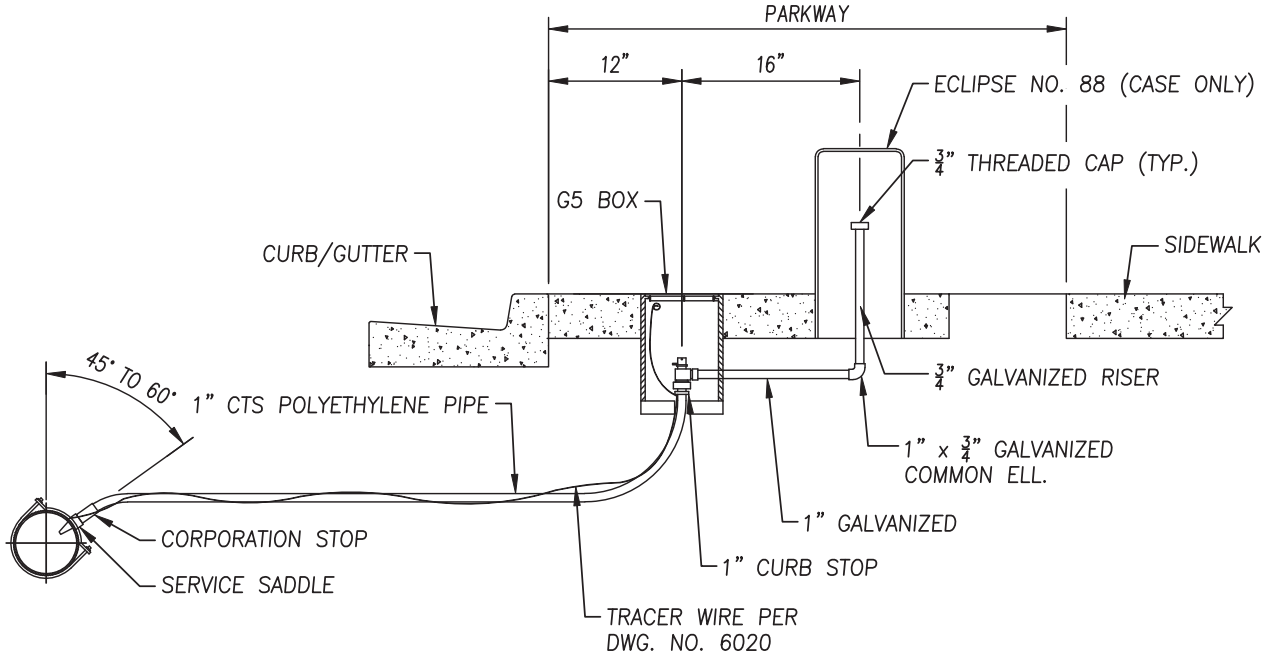

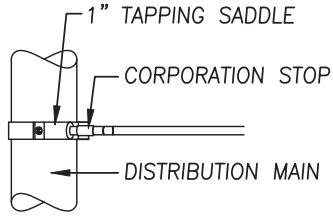

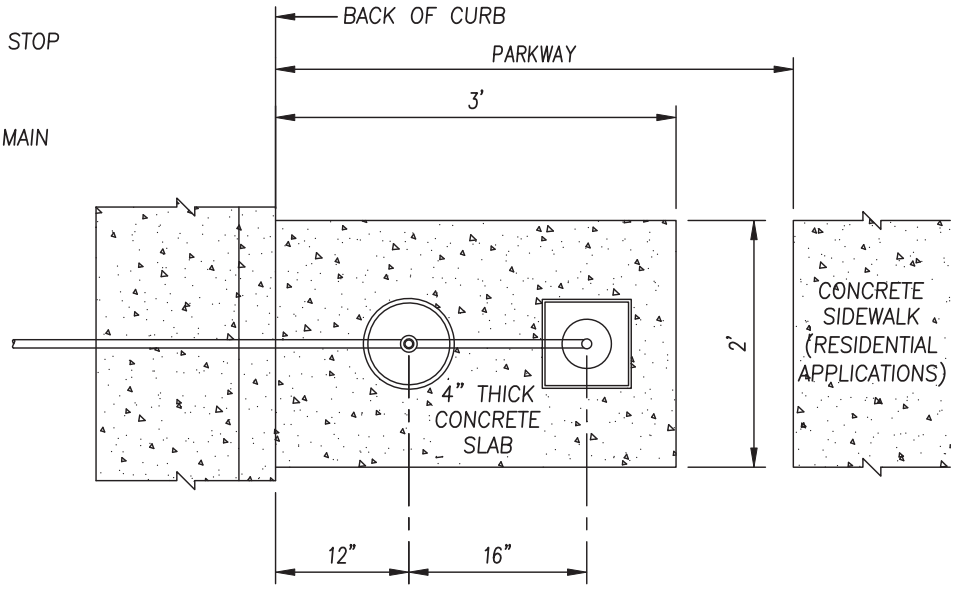

NOTES:

1. PIPES SHALL BE GALVANIZED STANDARD IRON OR POLYETHYLENE PIPE.
2. ALL FITTINGS SHALL BE 1" POLYETHYLENE, EXCEPT AS NOTED.
3. CORPORATION STOPS, ANGLE METER STOPS, AND METER FLANGES SHALL BE AS SHOWN ON PER DWG. NO. 6210
4. SEE TECHNICAL SPECIFICATIONS NO 16, "WATER MAINS" FOR WATER SERVICE FITTINGS, MODELS NUMBERS AND METER INFORMATION.
5. ON COMMERCIAL/INDUSTRIAL APPLICATIONS, ECLIPSE NO. 88 BOX WITH RISER SHALL BE PLACED BEHIND SIDEWALK OR AS DIRECTED BY CITY ENGINEER.

REVISIONS	DATE

CITY OF TULARE
PUBLIC IMPROVEMENT STANDARD

WATER MONITORING STATION

DRAWING NO.: 6430

Approved By:

Date: 1/1/16 City Engineer

1 OF 1

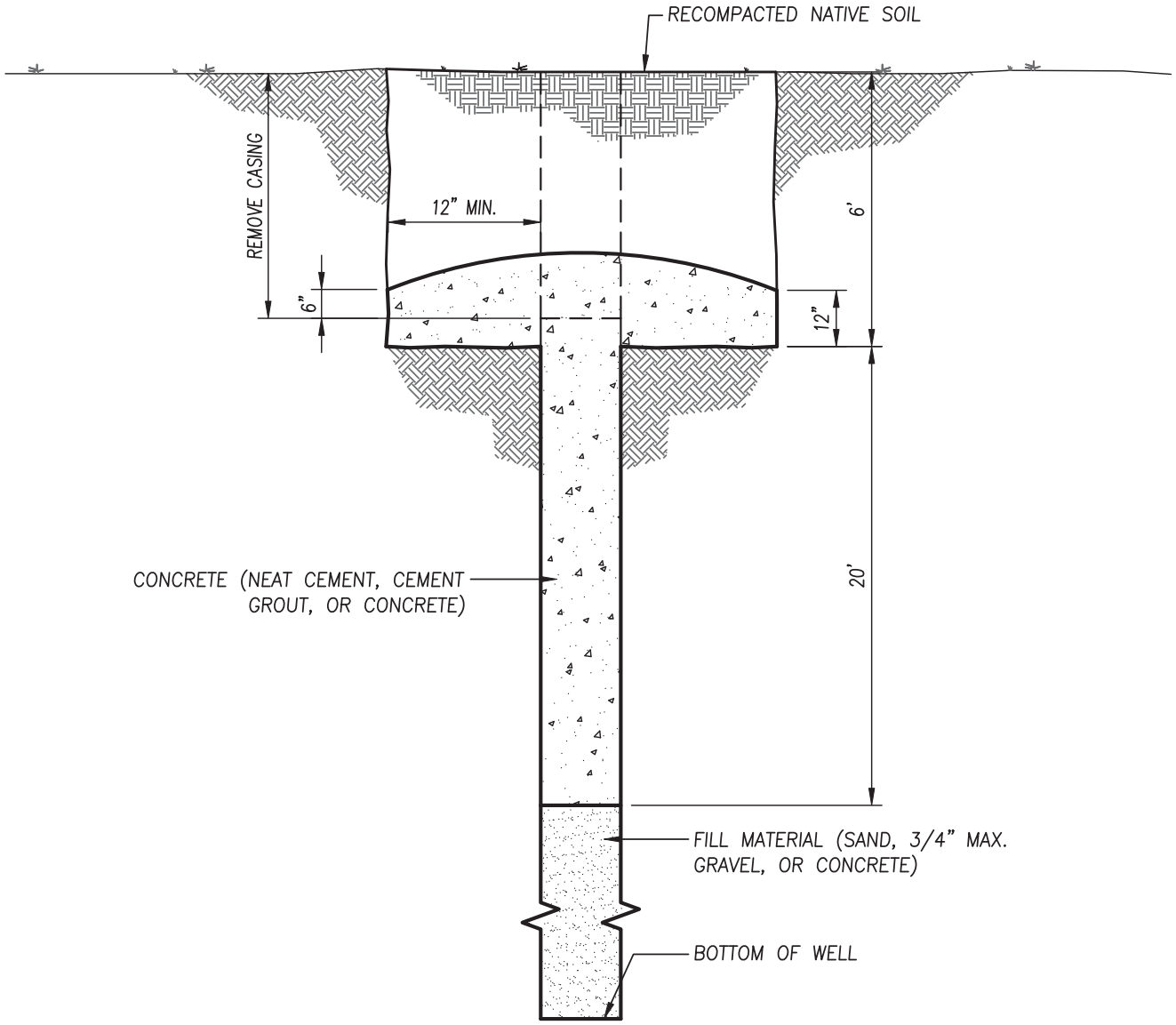

NOTES:

1. A C–57 LICENSED CONTRACTOR MUST COMPLETE A WELL PERMIT APPLICATION WITH THE CITY OF TULARE.
2. REMOVE THE PUMP, ELECTRICAL WIRING, AND ANY PIPING.
3. CLEAN THE WELL SO THAT ALL UNDESIRABLE MATERIALS, INCLUDING OBSTRUCTIONS TO FILLING AND SEALING, DEBRIS, OIL FROM OIL–LUBRICATED PUMPS, OR CONTAMINANTS THAT COULD INTERFERE WITH THE WELL DESTRUCTION ARE REMOVED FOR DISPOSAL.
4. EXCAVATE AROUND THE CASING TO A DEPTH OF SIX (6) FEET WITH THE WELL CASING CUT OFF TO THE BOTTOM OF THE EXCAVATION.
5. FILL THE LOWER PORTION OF THE WELL WITH INORGANIC FILL MATERIAL (CLAY, SAND, SILT, NATIVE SOIL).
6. FILL THE TOP TWENTY (20) FEET OF THE WELL CASING WITH CEMENT MATERIALS APPROVED BY THE CITY ENGINEER (SUITABLE MATERIALS ARE NEAT CEMENT, SAND–CEMENT GROUT AND CONCRETE). ALLOW THE MATERIAL TO OVERFLOW INTO EXCAVATION PROVIDING A MUSHROOM TYPE SEAL (REFER TO PICTURE).
7. BACKFILL THE EXCAVATION WITH NATIVE SOIL ONCE CEMENT MATERIAL HAS HARDENED.
8. COORDINATE WITH COUNTY OF TULARE HEALTH DEPARTMENT FOR ADDITIONAL REQUIREMENTS AND/OR PERMITS.
9. CONDITIONS AT ANY GIVEN SITE MAY REQUIRE MORE STRINGENT PROCEDURES AS NECESSARY TO PROTECT GROUNDWATER. A WELL COMPLETION REPORT IS REQUIRED ON ALL WELL ABANDONMENTS.

REVISIONS	DATE

CITY OF TULARE
PUBLIC IMPROVEMENT STANDARD

WELL ABANDONMENT

DRAWING NO.: 6435

Approved By:

Date: 1/1/16 City Engineer

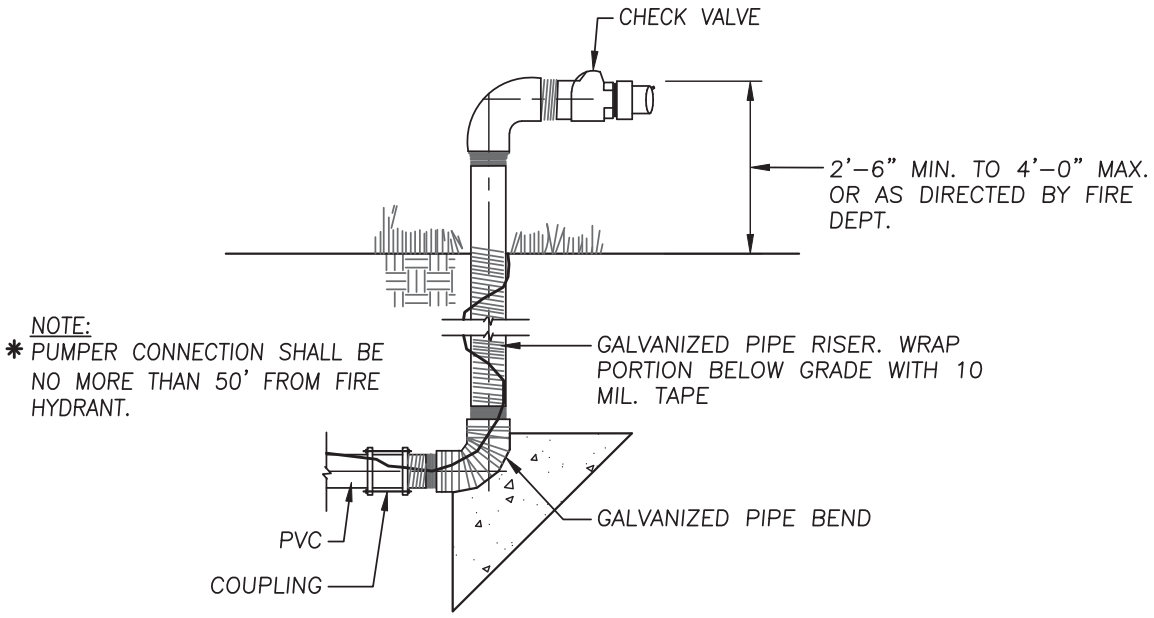

SECTION A–A

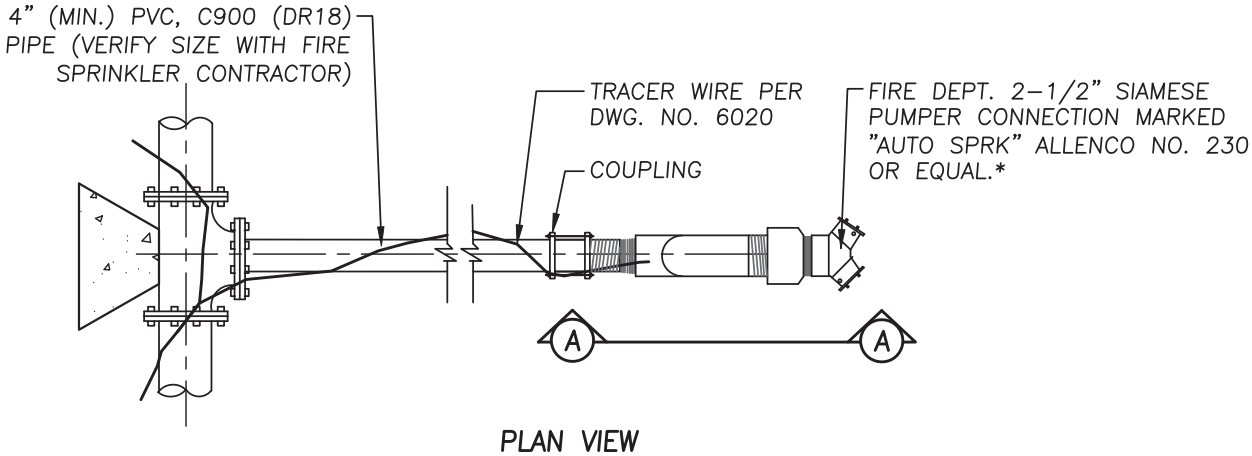

PLAN VIEW

NOTES:

PER CITY OF TULARE FIRE DEPARTMENT POLICY #11–001, FIRE DEPARTMENT CONNECTIONS SHALL BE IDENTIFIED AS FOLLOWS:

1. EACH FDC SHALL BE DESIGNATED BY A SIGN HAVING RAISED LETTERS AT LEAST ONE INCH IN SIZE CAST ON PLAT OR FITTING READING FOR SERVICE DESIGNATED: E.G. – "AUTOSPRINKLER", "OPEN SPRINKLER", "STANDPIPE", OR "AUTOSPRINKLER AND STANDPIPE".
2. THE SIGN SHALL BE RED WITH WHITE LETTERS.
3. THE SIGN SHALL MEASURE 10 INCHES LONG BY 5 INCHES TALL, AND NOT BE OF LESS THAN 10 GAUGE METAL, SECURELY ATTACHED BY BOLTS OR STEEL RODS.
4. LETTERING SHALL BE 1 INCH BLOCK TYPE LETTERS, WHITE IN COLOR.
5. THE SIGN SHALL INDICATE THE BUILDING ADDRESS OR PORTION OF THE BUILDING SERVED AND OR ZONE.

REVISIONS	DATE

CITY OF TULARE
INCORPORATED APRIL 5, 1888

CITY OF TULARE
PUBLIC IMPROVEMENT STANDARD

FIRE DEPARTMENT CONNECTION

DRAWING NO.: 6440

Approved By:

Date: 1/1/16 City Engineer

1 OF 1

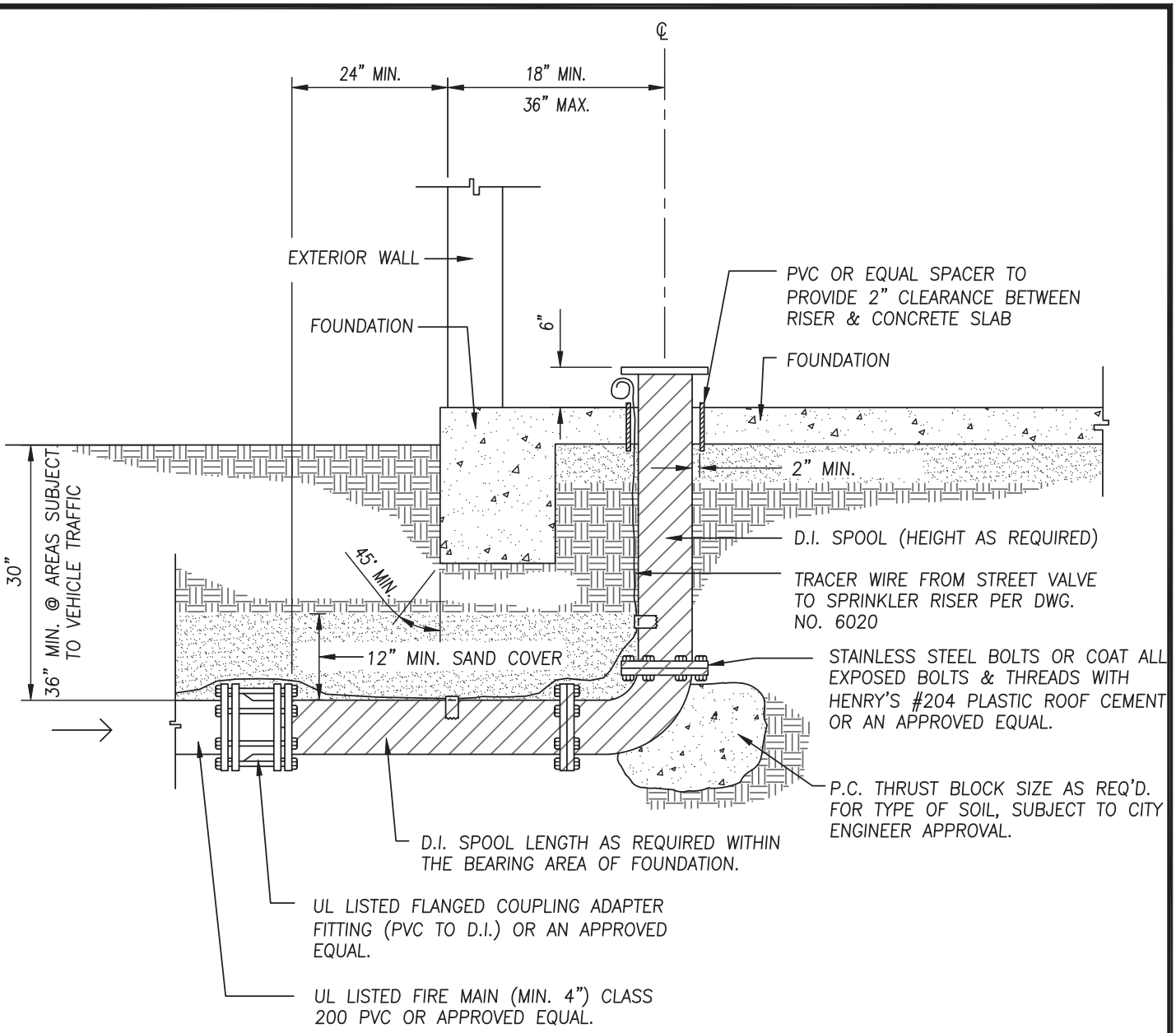

GENERAL NOTES:

A. FIRE LINE SHALL BE TESTED IN ACCORDANCE WITH THE SECTION 76, "WATERLINES" OF THE CITY STANDARD SPECIFICATIONS. NO CONNECTION MAY BE MADE UNTIL WATER SAMPLES HAVE BEEN TESTED AND APPROVED.

B. LOCATION OF FIRE SPRINKLER RISER SHALL BE APPROVED BY THE FIRE DEPARTMENT.

C. MATERIALS SHALL BE UL LISTED FOR FIRE SERVICE.

D. WRAP BOLTS WITH 6 MIL PLASTIC SHEATHING PRIOR TO PLACEMENT OF THRUST BLOCK(S).

E. ALL FITTINGS AND RISERS SHALL BE DUCTILE IRON INTERNALLY CEMENT LINED FOR FIRE SERVICE AND WRAPPED WITH TWO LAYERS OF UPC LISTED PLASTIC TAPE (MINIMUM 40 MIL) OR COATED WITH HENRY'S #204 PLASTIC ROOF CEMENT OR AN APPROVED EQUAL.

REVISIONS	DATE

CITY OF TULARE
PUBLIC IMPROVEMENT STANDARD

FIRE MAIN - BUILDING CONNECTION

DRAWING NO.: 6445

Approved By:

Date: 1/1/16 City Engineer

1 OF 1

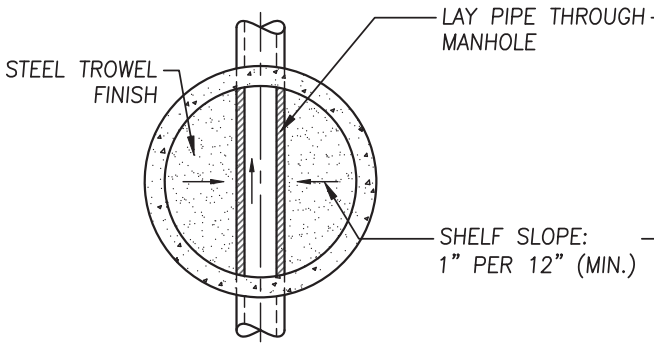

SECTION B–B

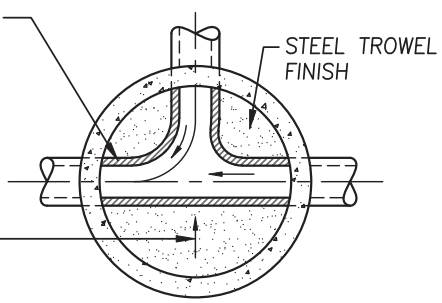

ALTERNATE FLOW DIAGRAM

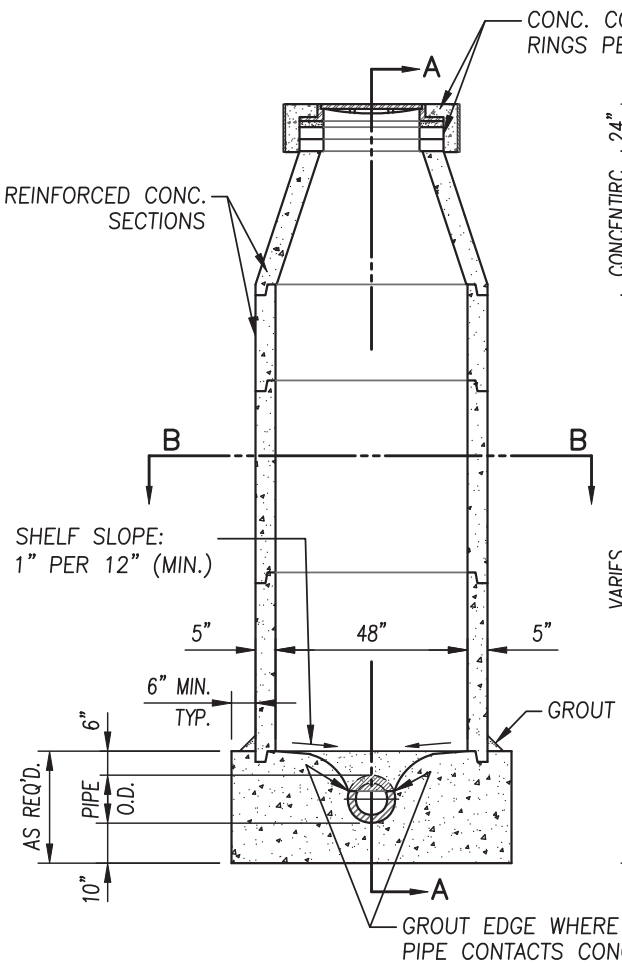

ELEVATION

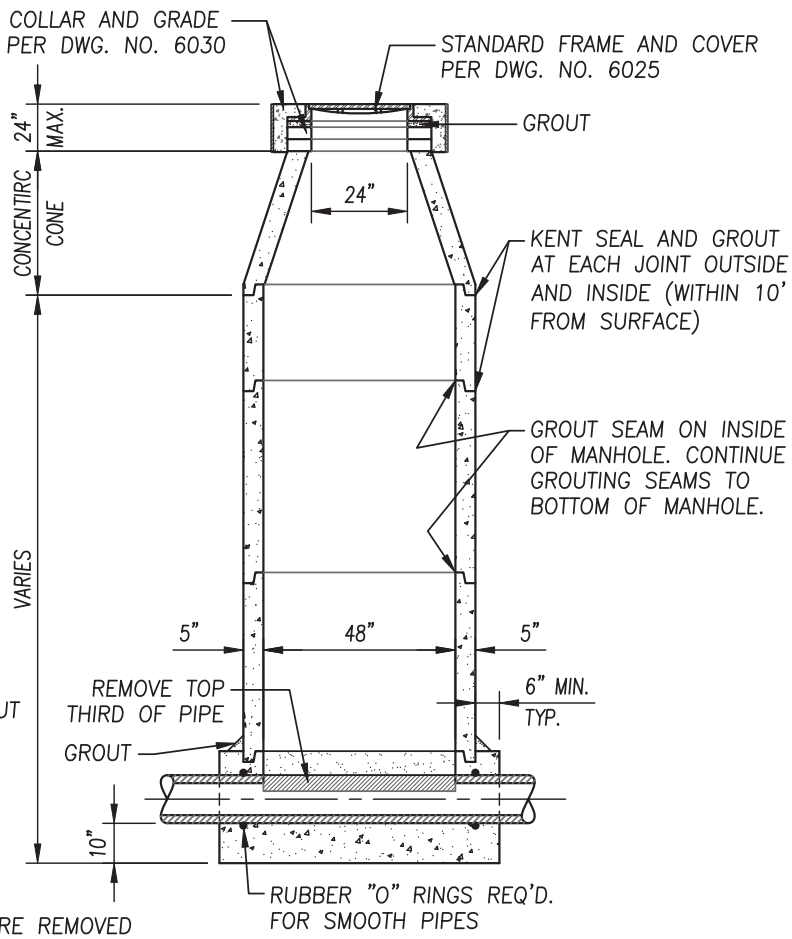

SECTION A–A

NOTES:

1. CONFORM TO PIPE MANUFACTURER'S REQUIREMENTS AS DIRECTED BY CITY ENGINEER.
2. REINFORCED CONCRETE PIPE SECTIONS SHALL MEET REQUIREMENTS OF A.S.T.M. SPEC. C–478.
3. ALL CONCRETE SHALL BE CLASS 2
4. USE OF PRE–CAST MANHOLE BASES AND PRECAST BARREL WITH PREFORMED OPENINGS SHALL BE APPROVED BY CITY ENGINEER PRIOR TO BEGINNING WORK.
5. SEE DESIGN GUIDELINES FOR USE OF TYPE I MANHOLES.

REVISIONS	DATE

CITY OF TULARE
PUBLIC IMPROVEMENT STANDARD

TYPE I MANHOLE

DRAWING NO.: 6610

Approved By:

Date: 1/1/16 City Engineer

1 OF 1

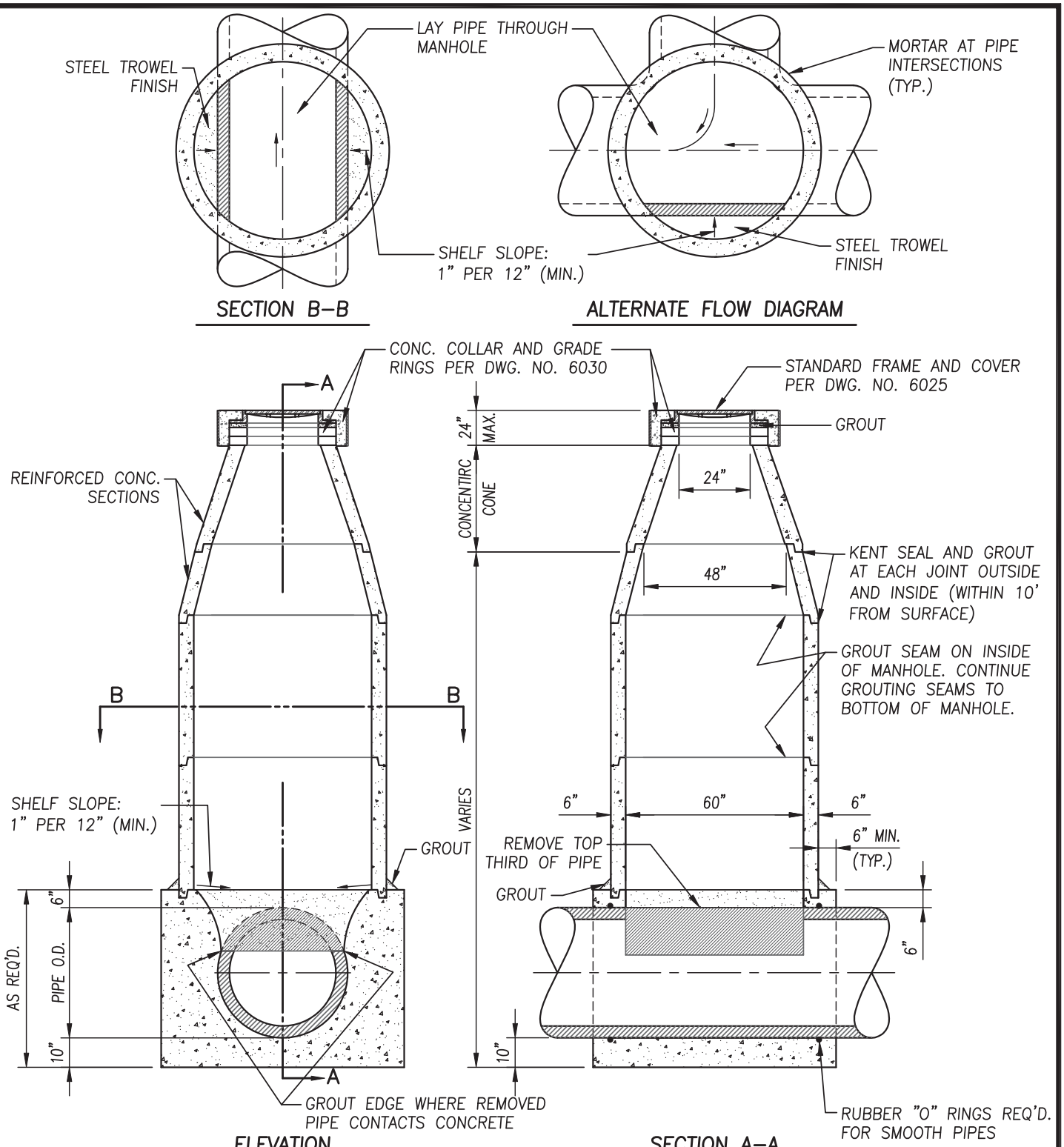

NOTES:

1. CONFORM TO PIPE MANUFACTURER'S REQUIREMENTS AS DIRECTED BY CITY ENGINEER.
2. REINFORCED CONCRETE PIPE SECTIONS SHALL MEET REQUIREMENTS OF A.S.T.M. SPEC. C–478.
3. ALL CONCRETE SHALL BE CLASS 2
4. USE OF PRE–CAST MANHOLE BASES AND PRECAST BARREL WITH PREFORMED OPENINGS SHALL BE APPROVED BY CITY ENGINEER PRIOR TO BEGINNING WORK.
5. SEE DESIGN GUIDELINES FOR USE OF TYPE II MANHOLES.

REVISIONS	DATE

CITY OF TULARE
PUBLIC IMPROVEMENT STANDARD

TYPE II MANHOLE

DRAWING NO.: 6611

Approved By:

Date: 1/1/16 City Engineer

1 OF 1

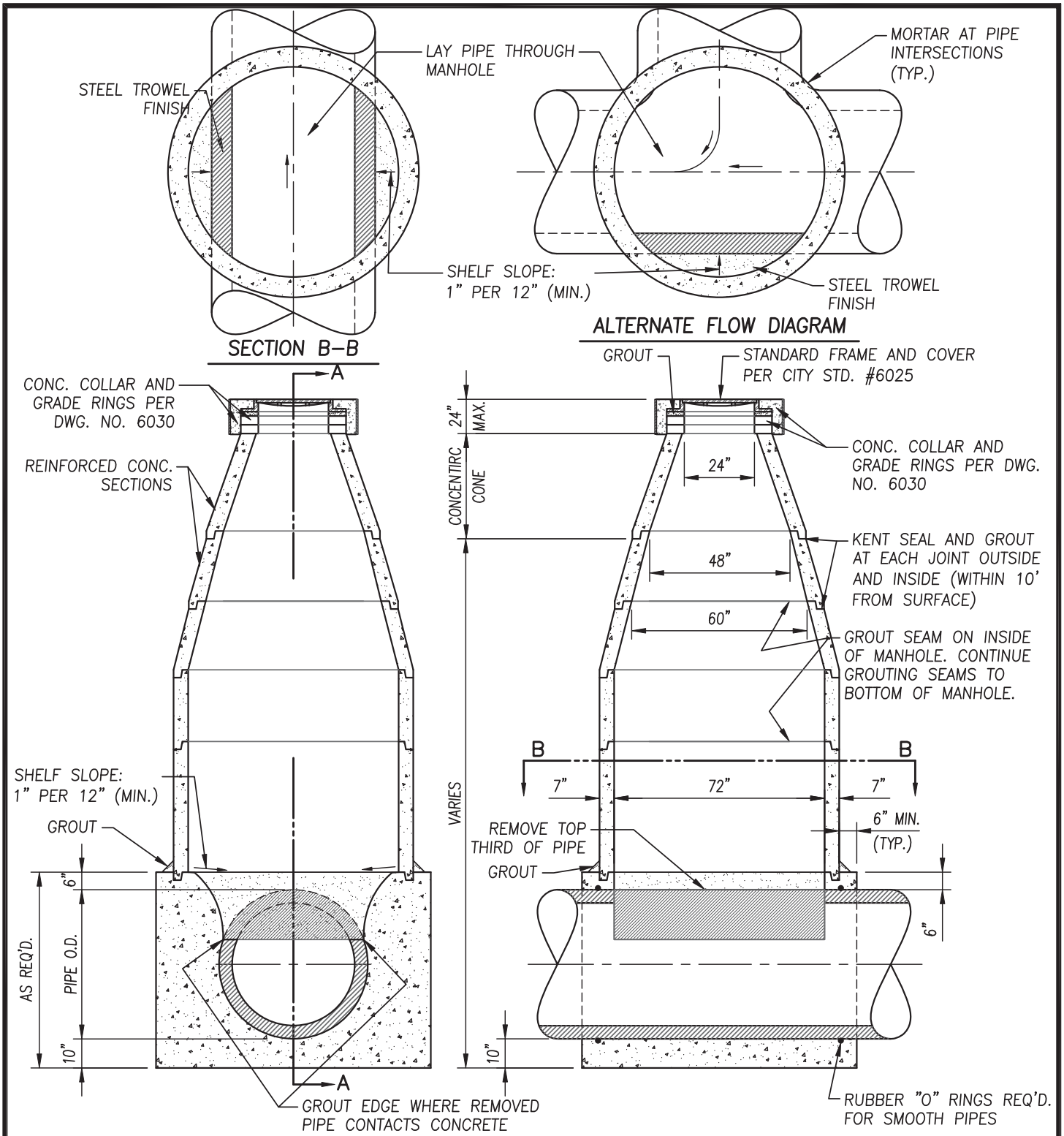

NOTES:

1. CONFORM TO PIPE MANUFACTURER'S REQUIREMENTS AS DIRECTED BY CITY ENGINEER.
2. REINFORCED CONCRETE PIPE SECTIONS SHALL MEET REQUIREMENTS OF A.S.T.M. SPEC. C–478.
3. ALL CONCRETE SHALL BE CLASS 2
4. USE OF PRE–CAST MANHOLE BASES AND PRECAST BARREL WITH PREFORMED OPENINGS SHALL BE APPROVED BY CITY ENGINEER PRIOR TO BEGINNING WORK.
5. SEE DESIGN GUIDELINES FOR USE OF TYPE III MANHOLES.

REVISIONS	DATE

CITY OF TULARE
PUBLIC IMPROVEMENT STANDARD

TYPE III MANHOLE

DRAWING NO.: 6612

Approved By:

Date: 1/1/16 City Engineer

1 OF 1

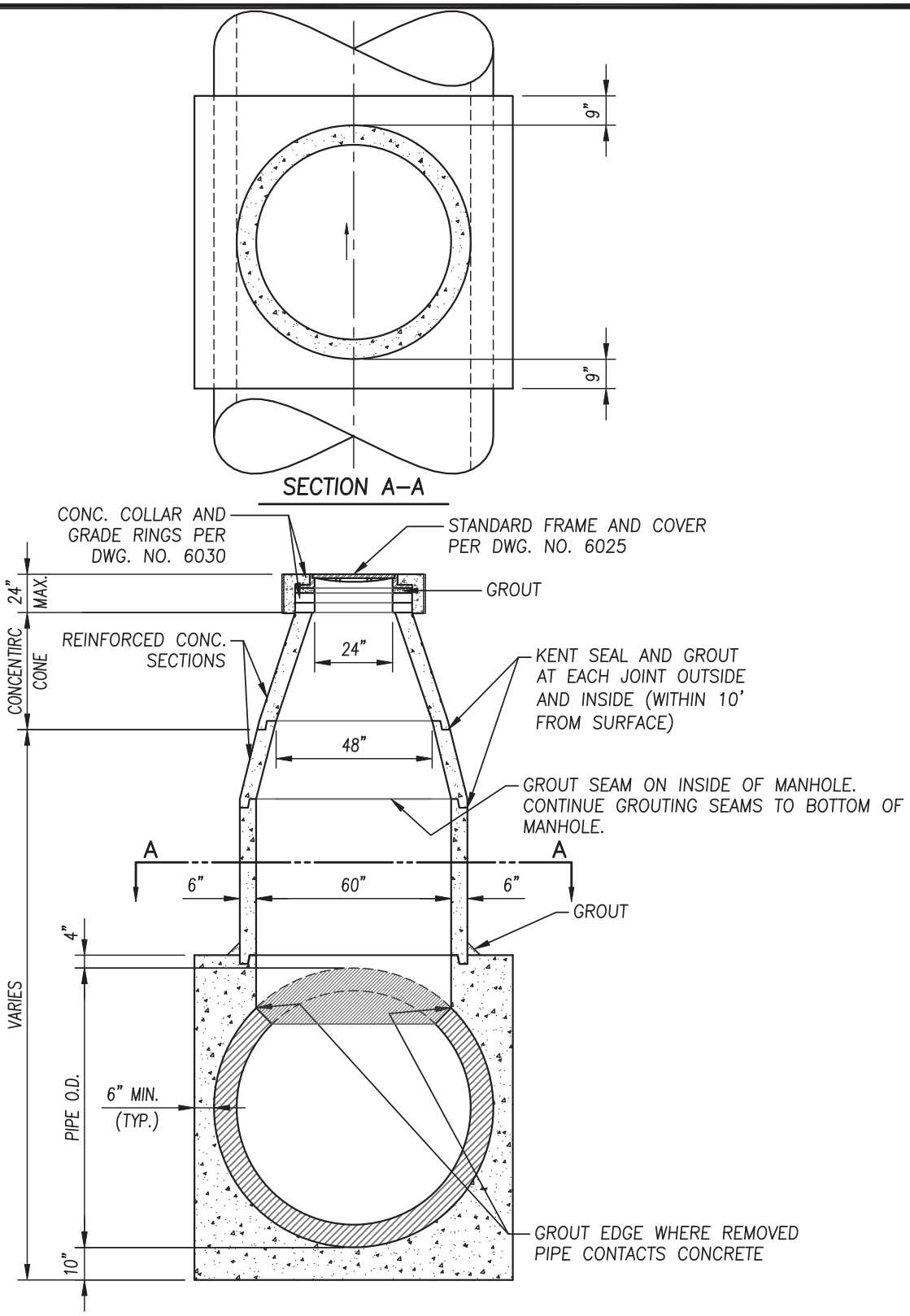

NOTES:

1. CONFORM TO PIPE MANUFACTURER'S REQUIREMENTS AS DIRECTED BY CITY ENGINEER.
2. REINFORCED CONCRETE PIPE SECTIONS SHALL MEET REQUIREMENTS OF A.S.T.M. SPEC. C–478.
3. ALL CONCRETE SHALL BE CLASS 2
4. USE OF PRE–CAST MANHOLE BASES AND PRECAST BARREL WITH PREFORMED OPENINGS SHALL BE APPROVED BY CITY ENGINEER PRIOR TO BEGINNING WORK.
5. SEE DESIGN GUIDELINES FOR USE OF TYPE IV MANHOLES.

REVISIONS	DATE

CITY OF TULARE
PUBLIC IMPROVEMENT STANDARD

TYPE IV MANHOLE

DRAWING NO.: 6613

Approved By:

Date: 1/1/16 City Engineer

1 OF 1

DROP BOWL MODEL	WILL FIT SIZES UP TO
A4	UP TO 6"
A6	UP TO 8"
A8	UP TO 10"
B10	UP TO 12"
24"	12" AND 15" INLET PIPES
30"	18" INLET

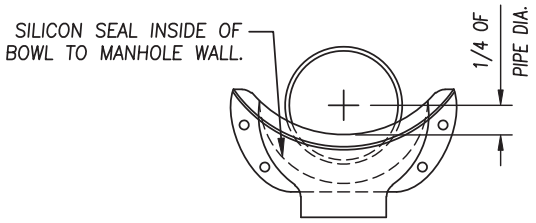

DROP BOWL MOUNTING POSITION

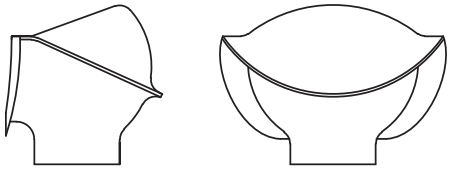

FORCE LINE HOOD

NOTES:
1. ALL INSIDE DROP PIPING TO BE A.B.S. OR PVC SDR–26.
2. CEMENT ALL JOINTS.
3. CLAMPS TO BE $1\frac{1}{2}$ X 12 GA. STAINLESS STEEL, ANCHORED TO M.H. WALL WITH $2\frac{1}{2}$" CADMIUM PLATED BOLTS.

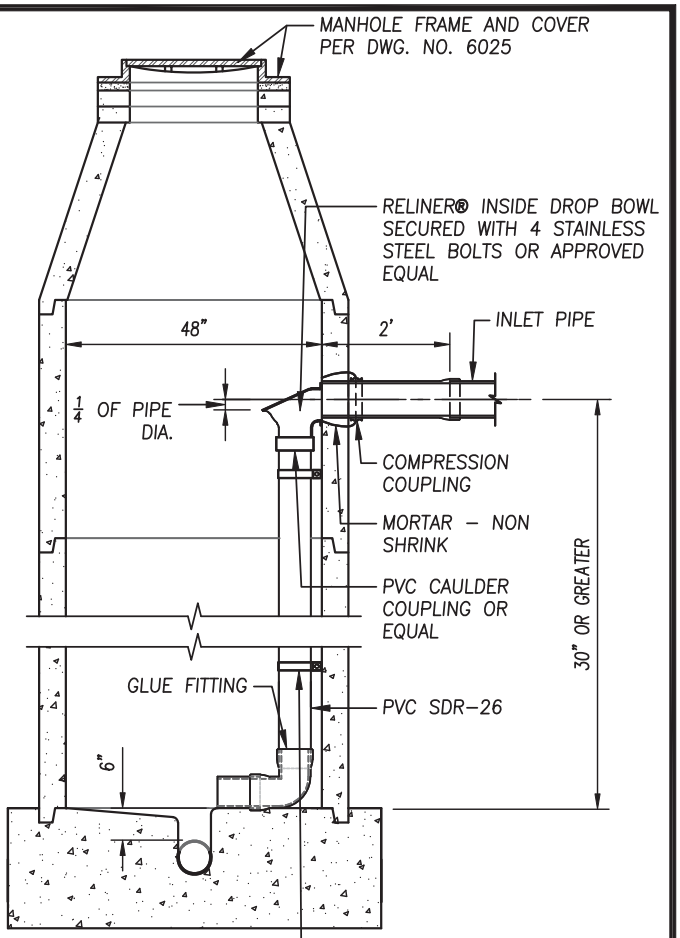

INSIDE DROP CONNECTION

RELINER® STAINLESS STEEL STRAPS OR EQUAL. SECURE TO STRUCTURE WITH 2 STAINLESS STEEL BOLTS. STRAP AT 4' INTERVALS (MIN. OF 2)SEE CITY DETAIL FOR INSIDE DROP CONNECTION BRACKETS SEE #6615, SHT. 2

NOTES:
1. ALL INSIDE DROP CONNECTIONS FOR SERVICES AND COLLECTOR SEWERS SHALL USE THE DROP BOWL AS PRODUCED BY: RELINER–DURAN, INC.
   53 MT. ARCHER RD,
   LYME, CT 06371
   (860) 434–0277 FAX: (860) 434–3195 OR APPROVED EQUAL.

2. DROP BOWL MODEL "A4" SHALL BE USED FOR ALL INLET PIPES UP TO 6" INLETS, "A6" SHALL BE USED UP TO 8" INLETS, "B8" SHALL BE USED UP TO 10" INLETS, "B10" SHALL BE USED UP TO 12" INLETS. 24" DROP BOWL SHALL BE USED FOR 12" AND 15" INLETS. 30" DROP BOWL SHALL BE USED FOR 18" INLETS. LINES LARGER THAN 10" SHALL BE AS APPROVED BY THE CITY ENGINEER PRIOR TO BEGINNING WORK.

3. THE FORCE LINE HOOD SHALL BE ATTACHED ON MODELS "A–4" & "A–6" WHEN THE INCOMING LINE IS FROM A FORCE MAIN OR THE SLOPE IS S=0.03 OR GREATER.

4. SECURE DROP PIPE TO MANHOLE WALL WITH RELINER–DURAN, INC STAINLESS STEEL ADJUSTABLE CLAMPING BRACKETS OR EQUAL SEE #6610, SHT. 2..

5. ATTACH THE DROP BOWL & EACH CLAMPING BRACKET TO THE MANHOLE WALL WITH 3/8" X 3 3/4" RAMSET/RED HEAD BOLTS HELD INPLACE WITH 2 STAGE EPOXY PASTE. EPOXY SHALL MEET THE FOLLOWING REQUIREMENTS:

   A. EPOXY PASTE SHALL BE A TWO COMPONENT, 100% SOLID SYSTEM. EPOXY SHALL BE SIKADUR 31 HI–MOD GEL BY SIKA CORPORATION OR EQUAL.

   B. THE EPOXY PASTE SHALL DEVELOP A MINIMUM COMPRESSIVE STRENGTH OF 5,000 PSI IN 28 DAYS WHEN TESTED IN ACCORDANCE WITH ASTM D695 AT 73 DEGREES.

   C. THE EPOXY PASTE SHALL DEVELOP A MINIMUM TENSILE STRENGTH OF 3,000 PSI IN 14 DAYS WHEN TESTED IN ACCORDANCE WITH ASTM D638.

   D. THE EPOXY PASTE SHALL DEVELOP A MINIMUM BOND STRENGTH OF 2,000 PSI IN 2 DAYS WHEN TESTED IN ACCORDANCE WITH ASTM C882 (HARDENED CONCRETE TO HARDENED CONCRETE).

   E. MANUFACTURER'S INSTRUCTIONS SHALL BE PRINTED ON EACH CONTAINER IN WHICH THE MATERIALS ARE PACKAGED.

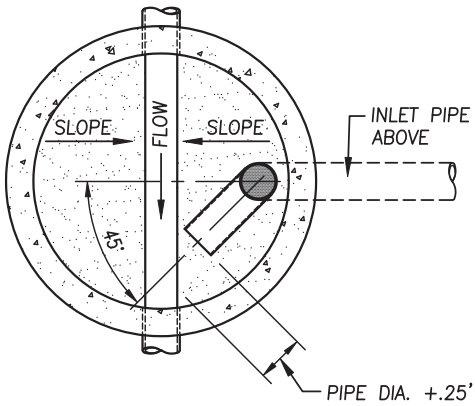

INSIDE DROP – PLAN

REVISIONS	DATE

CITY OF TULARE
PUBLIC IMPROVEMENT STANDARD

SANITARY SEWER DROP MANHOLE

DRAWING NO.: 6615

Approved By:

Date: 1/1/16 City Engineer

1 OF 2

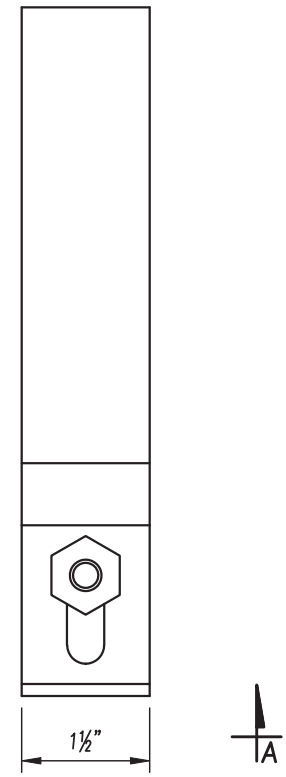

'B – B'

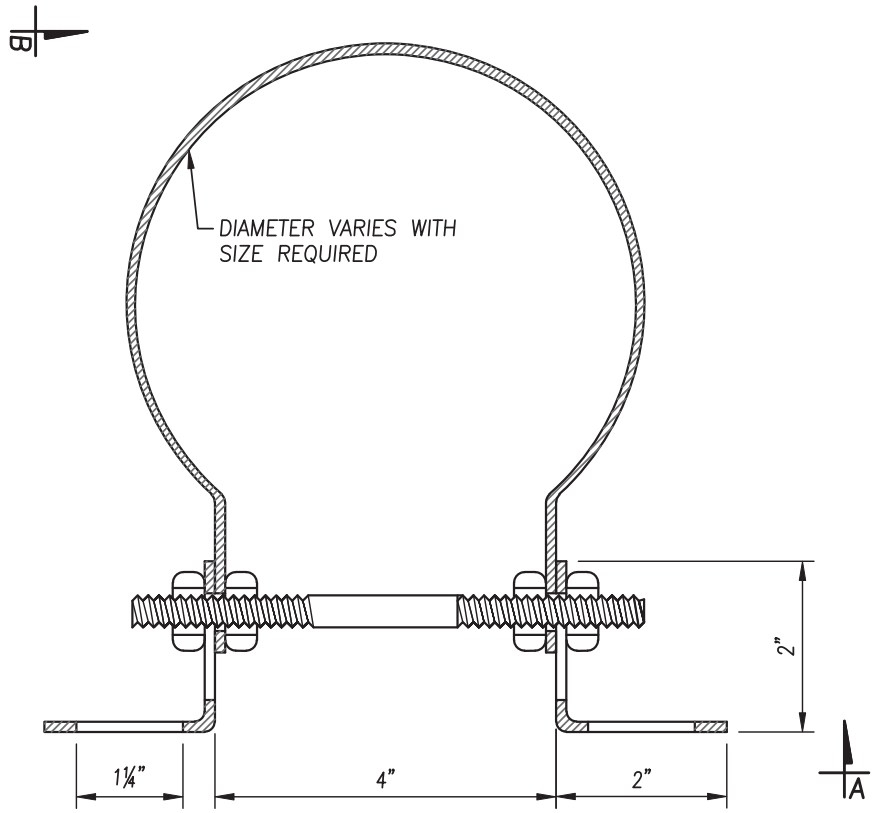

TOP VIEW

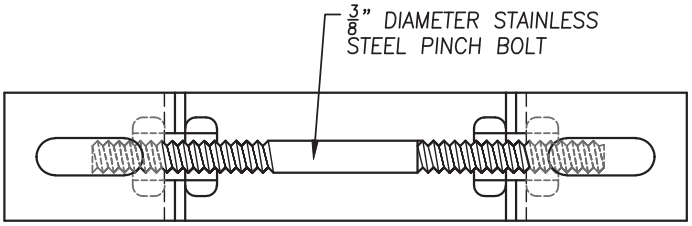

'A – A'

STAINLESS STEEL ADJUSTABLE CLAMPING BRACKET AS MANUFACTURED BY:
RELINER–DURAN, INC.
53 MT. ARCHER ROAD
LYME, CT. 06371
(860) 434–0277 FAX:(860) 434–3195 OR APPROVED EQUAL.

SPECIFICATIONS:

1. CLAMP AND BRACKETS SHALL BE TYPE 304 STAINLESS STEEL, 11 GAUGE (.1196").
2. $\frac{3}{16}$"ø PINCH BOLT AND NUTS SHALL BE TYPE 18–8 STAINLESS STEEL.
3. STANDARD SIZES TO FIT 4", 6", 8" & 10" PVC SEWER PIPE SDR–26.
4. FOR PIPE SIZES LARGER THAN 10", CITY ENGINEER SHALL APPROVE DESIGN PRIOR TO BEGINNING WORK.

REVISIONS	DATE

CITY OF TULARE
PUBLIC IMPROVEMENT STANDARD

SANITARY SEWER DROP
MANHOLE - CLAMPING BRACKET

DRAWING NO.: 6615

Approved By:

Date: 1/1/16 City Engineer

2 OF 2

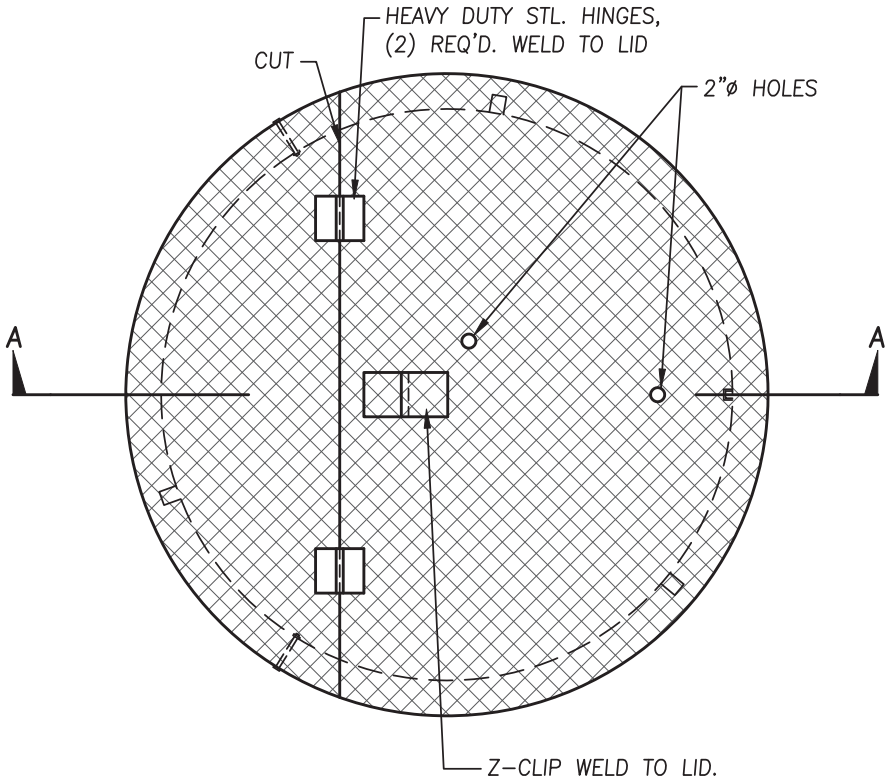

TOP VIEW

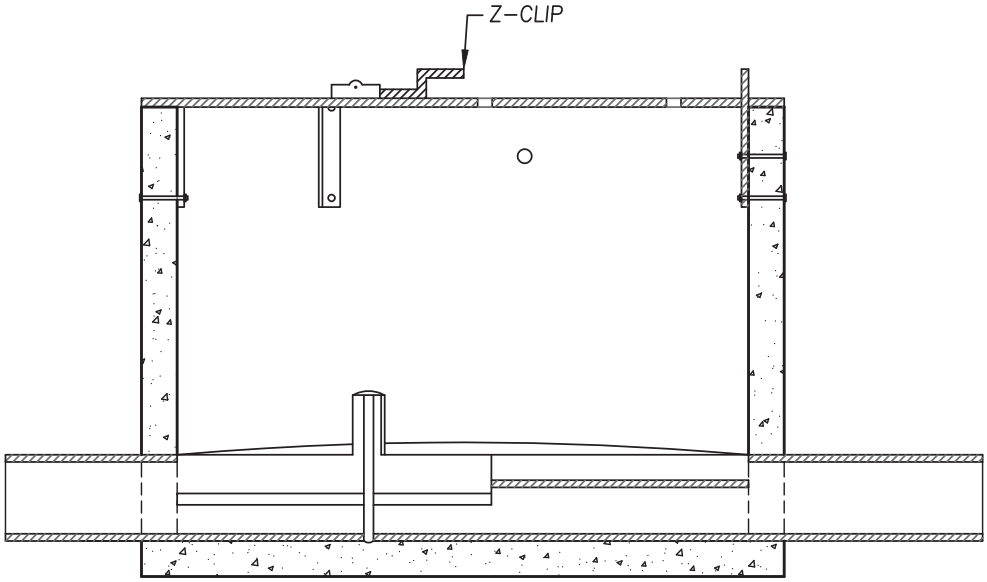

SECTION A-A

REVISIONS	DATE

CITY OF TULARE
PUBLIC IMPROVEMENT STANDARD

SANITARY SEWER CONTROL MANHOLE

DRAWING NO.: 6620

Approved By:

Date: 1/1/16 City Engineer

1 OF 1

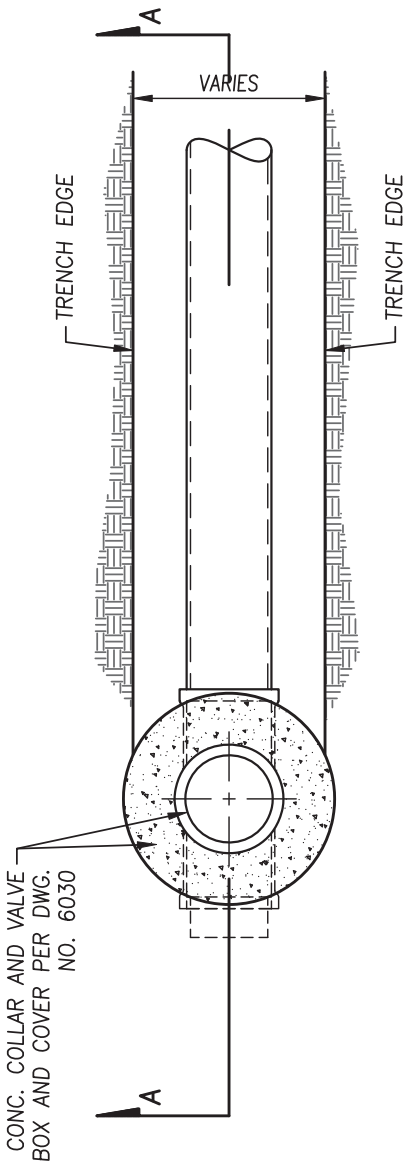

SEWER CLEANOUT DETAIL
PLAN VIEW

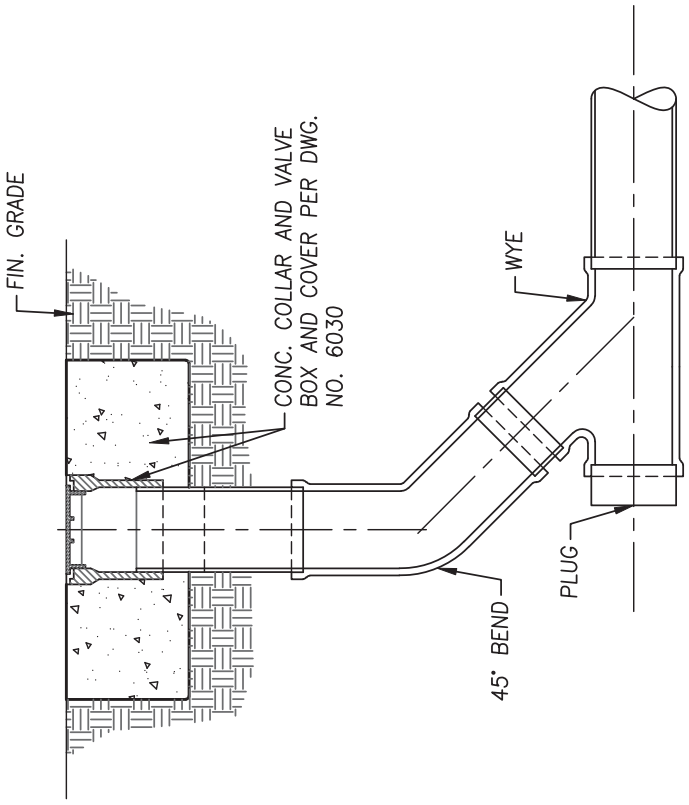

WYE INSTALLATION

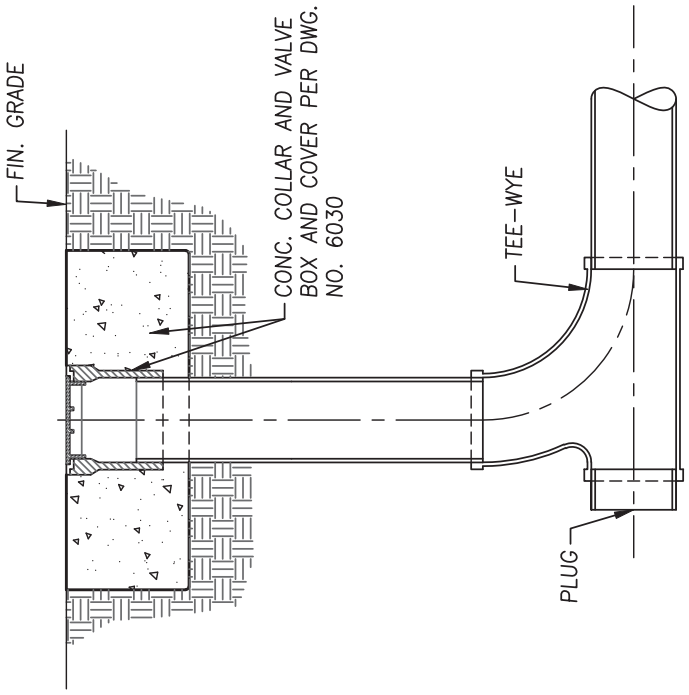

TEE-WYE INSTALLATION

SEWER CLEANOUT DETAIL
PROFILE VIEW – SECTION A–A

REVISIONS	DATE

CITY OF TULARE
PUBLIC IMPROVEMENT STANDARD

CLEANOUT AND WELL

DRAWING NO.: 6710

Approved By:

Date: 1/1/16 City Engineer

1 OF 1

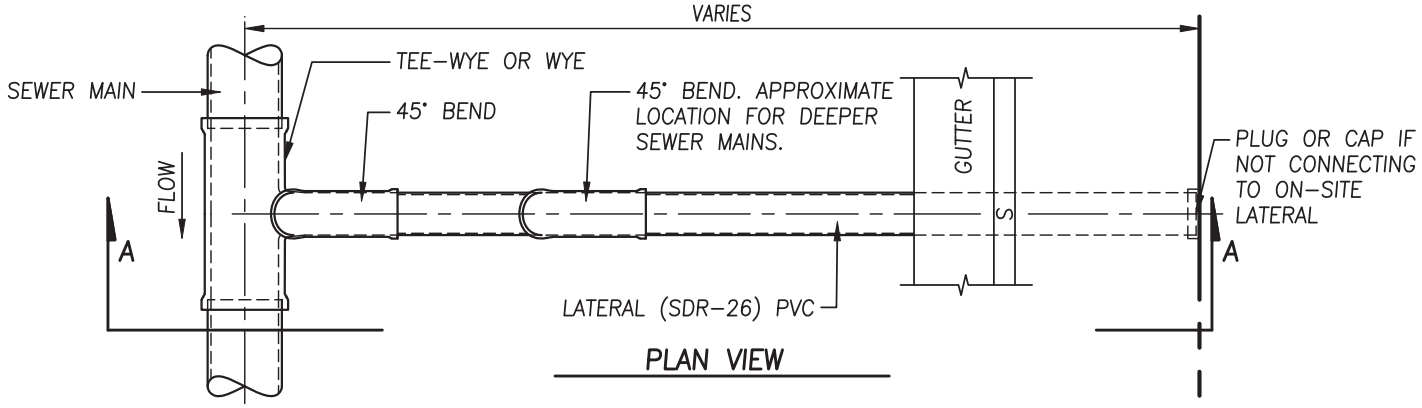

PLAN VIEW

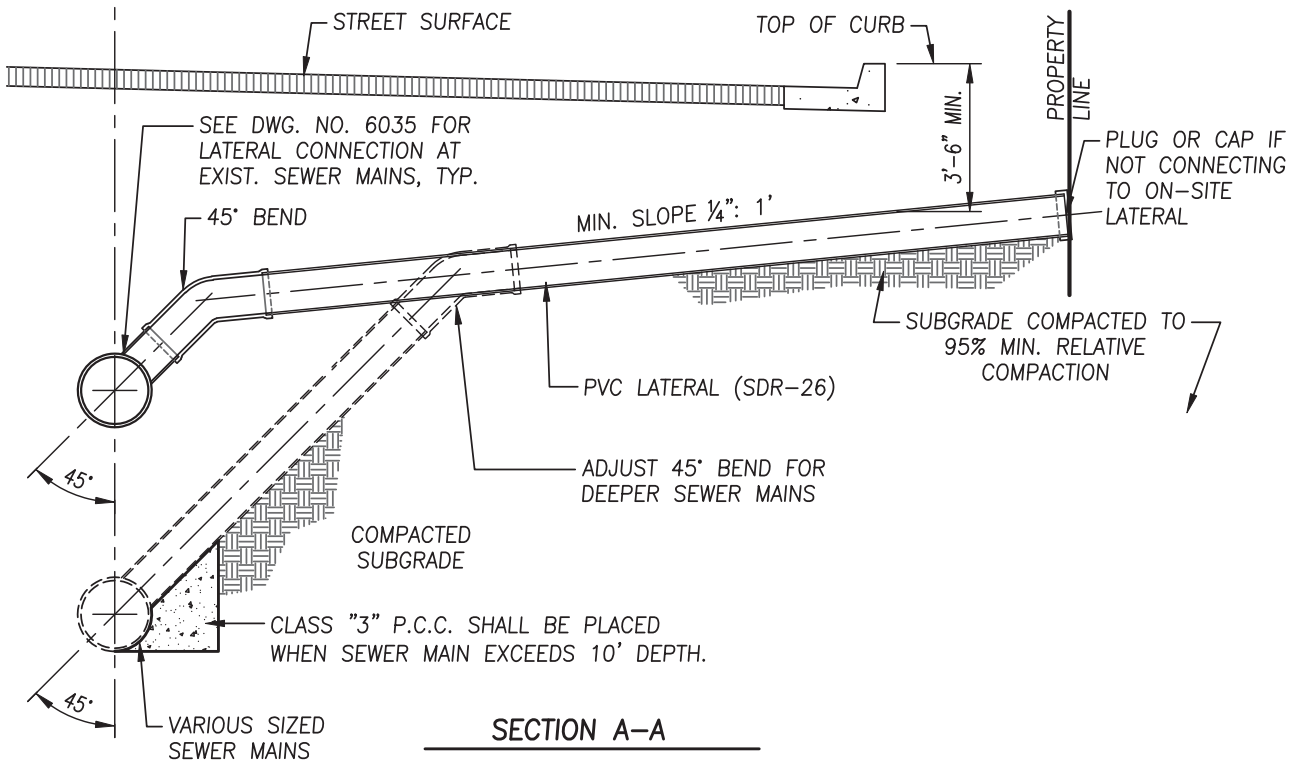

SECTION A–A

NOTES:

1. MINIMUM DIAMETER: 4" (RESIDENTIAL), 6" (COMMERCIAL OR INDUSTRIAL). ALL PARTS OF LATERAL TO BE OF SAME DIAMETER.

2. SEWER LATERAL PIPE AND FITTINGS SHALL BE SDR 26 PVC, WITH A MINIMUM DIAMETER OF 4", AND A MINIMUM SLOPE OF 2%. PIPE SEGMENTS SHALL BE JOINED PER PIPE MANUFACTURER'S RECOMMENDATIONS. LATERAL INSTALLATION SHALL BEGIN AT MAIN AND PROCEED TO RIGHT OF WAY. GRADE SHALL BE UNIFORM FROM MAIN TO PROPERTY LINE. CHANGES IN GRADE OF LATERAL SHALL BE MADE USING LONG–RADIUS BENDS. CEMENT OR HOT–POUR JOINTS WILL NOT BE PERMITTED. PIPE MATERIALS SHALL BE CUT USING ONLY APPROVED TOOLS AND METHODS. SNAP–CUTTERS, ABRASIVE SAWS AND HACK–SAWS CAN BE USED AS APPROPRIATE FOR EACH PIPE MATERIAL. CHIPPING OR HAMMERING PIPES IS NOT ALLOWED. CHIPPED, CRACKED, BROKEN OR OTHERWISE DAMAGED PIPE SHALL BE REMOVED AND REPLACED WITH NEW PIPE.

3. TOP OF CURB SHALL BE MARKED WITH AN "S" DIRECTLY OVER LATERAL. THE "S" SHALL BE STAMPED IN NEW CONCRETE OR CHISELED INTO EXISTING CONCRETE, AND SHALL NOT BE LESS THAN 3" LONG, 2" WIDE AND $\frac{3}{16}$" DEEP.

4. TRACER WIRE SHALL BE PLACED ON LATERAL FROM SEWER MAIN TO PROPERTY LINE, AND THEN UP TO SURFACE.

5. DEPTH OF LATERAL SHALL NOT BE LESS THAN 3' FROM TOP OF PIPE UNLESS CONSTRUCTED OF C900 CLASS 305 DR14 PVC OR ENCASED IN CONCRETE. A MINIMUM CLEAR SEPARATION OF 18" SHALL BE MAINTAINED WHEN CROSSING WATERLINES.

REVISIONS	DATE

CITY OF TULARE
INCORPORATED APRIL 5, 1888

CITY OF TULARE
PUBLIC IMPROVEMENT STANDARD

SANITARY SEWER LATERAL

DRAWING NO.: 6810

Approved By:

Date: 1/1/16 City Engineer

1 OF 1

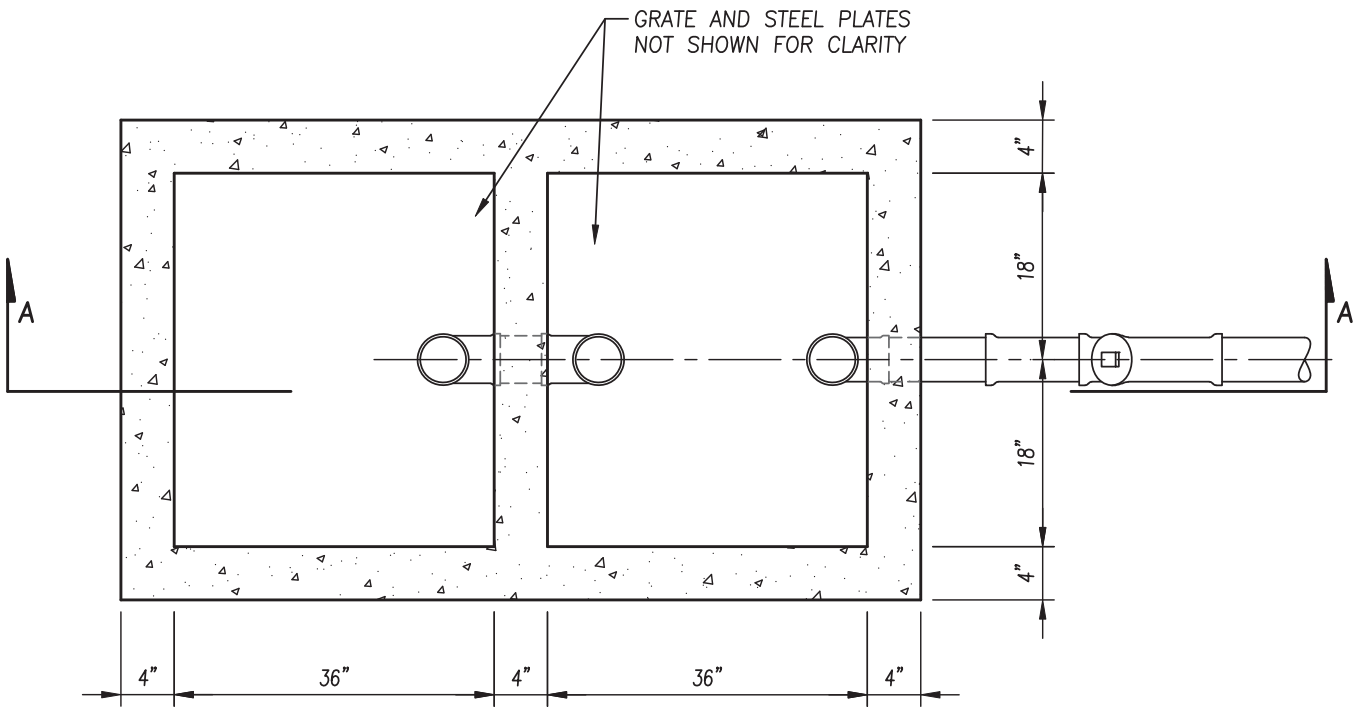

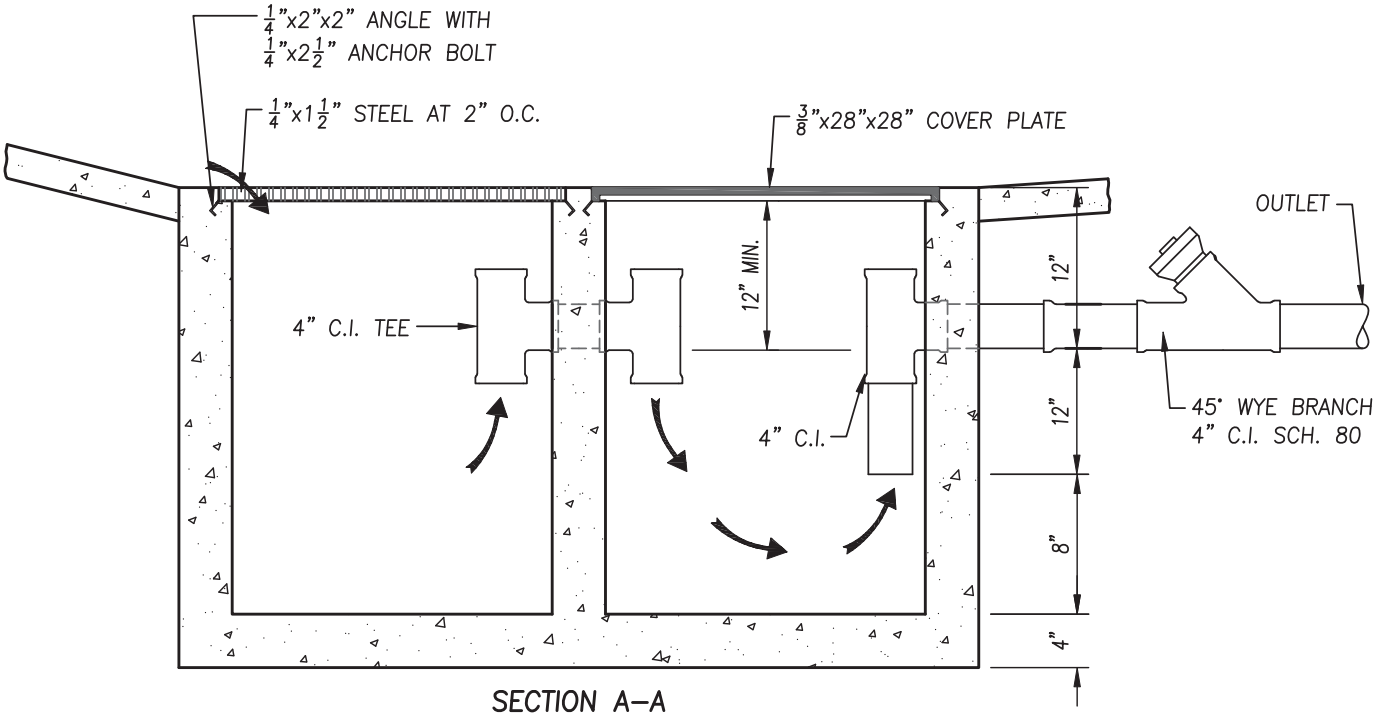

SECTION A–A

NOTES:

ALL EXPOSED STEEL TO BE GALVANIZED AFTER FABRICATION.
ALTERNATE TRAP DESIGNS MAY BE SUBMITTED FOR THE
APPROVAL OF THE CITY ENGINEER.

REVISIONS	DATE

CITY OF TULARE
PUBLIC IMPROVEMENT STANDARD

INDUSTRIAL TRAP

DRAWING NO.: 6910

Approved By:

Date: 1/1/16 City Engineer

1 OF 1